FAR 01070883
REV 2-3161

FAIRCHILD WESTON
SYSTEMS INC.
AVIAITON RECORDERS

OPERATION
and
COMPONENT MAINTENANCE MANUAL

(PDDU)
PORTABLE DATA DISPLAY UNIT
for
DIGITAL FLIGHT RECORDER FAIRCHILD TYPE F800

MP MASTER
MA30018

FAR 01070883
REV 2-3161

FAIRCHILD WESTON
SYSTEMS INC.
AVIAITON RECORDERS

OPERATION
and
COMPONENT MAINTENANCE MANUAL

(PDDU)
PORTABLE DATA DISPLAY UNIT
for
DIGITAL FLIGHT RECORDER FAIRCHILD TYPE F800

(PDDU)

PORTABLE DATA DISPLAY UNIT

TABLE OF CONTENTS

SECTION	TITLE	PAGE
1	GENERAL.	
2	EQUIPMENT SET-UP AND USE	
3	COMPUTER OPERATION (HX-20)	
4	THEORY OF OPERATION (PDDU)	
5	SCHEMATIC DIAGRAMS	
6	AUTOBOOT (PNEUMATIC PROGRAMS #17P300).	
7	PROGRAM RD542P (#17P301)	
8	PROGRAM DECOM 42 (#17P302)	
9	PROGRAM DFR TEST (#17P303)	
10	PROGRAM DECOM 73 (#17P304)	
11	AUTOBOOT (ELECTRIC PROGRAMS #17P350)	
12	PROGRAM RD 542E (#17P351).	
13	PROGRAM DFR TEST (#17P353)	
14	ASSEMBLY	
15	ILLUSTRATED PARTS LIST	

FAIRCHILD WESTON
Schlumberger
FAIRCHILD AVIATION RECORDERS
P.O. BOX 3041
SARASOTA, FLORIDA 33578

FAR 0107
REV 1-3161

DFR

TEST EQUIPMENT

PORTABLE DATA DISPLAY UNIT

PDDU

PN 17-TE165

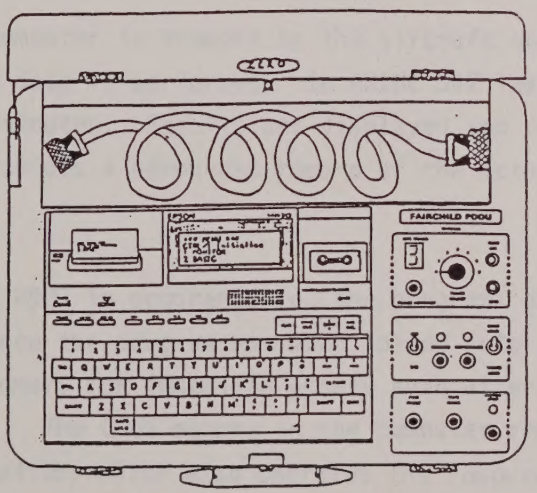

SECTION 1

GENERAL

PORTABLE DATA DIPLAY UNIT - PDDU

The PDDU is a test set designed for airline operational requirement to maintain and test digital flight recorders.

The PDDU is a compact, highly portable, DFR tester with data read circuitry and an advanced programmable computer for data analysis right in the aircraft thereby providing assurance of proper DFR function without the need of removing the recorder from the aircraft.

The required periodic function verification of the DFR demanded in the past to carry a copy recorder to the aircraft, make a tape copy, bring this tape to the computer center for printout and have someone analyze the data can be elimated through use of the PDDU.

With the PDDU the Computer is brought to the aircraft and an immediate analysis of the DFR data is performed. In ARINC 542 installation the basic test takes 3 minutes. Results are displayed and printed. The built in printer provides a permanent record of the actual results and data.

The computer in the PDDU is programmable, the programs are stored on a microcassette. Once the program has been loaded into the computer it will remain in memory for immediate access even after the computer power is turned off. The CMOS memory in the computer remains active from the built in battery which also operates the computer for 50 hours before a recharge is required.

The PDDU connects to the DFR-front panel ATE connector through a 10 ft. test cable.

The computer in the PDDU can be removed from the case and operate hundreds of feet away from the PDDU/DFR on a 2 wire cable. This permits the PDDU-Computer to be taken to the cockpit to verify the parameter values.

SECTION 1

The PDDU can be left connected to the DFR during flight (test flight), it does not effect the DFR function.

The analysis programs are in basic language and the inspection criteria can simply be modified.

The ARINC 573/717 programs display raw parameter values in decimal, octal or binary. Specific flight parameter analysis for the many different aircraft types and conditions nesessitates several software programs for this task.

Further, the PDDU, was designed to permit complete DFR-inspection - Acceptance Type Inspection - on the bench with the DFR powered by an existing ARINC 542 tester or a Fairchild ACS/2A (Aircraft Simulator) 17-TE116.

Page 8-4 shows the top view of the internal controls of the PDDU, the removable computer and the storage space for the cables.

For DFR function verification in the aircraft connect as shown on Page 8-5.

For bench use - such as Acceptance Test, Function Verification, etc. connect as shown on Page 8-6.

Results of an on-board DFR analysis of an ARINC 542 system is shown on Page 8-7.

In the ARINC 573/717 mode the data may be displayed also in octal format thereby permitting simple comparison to the air frame manufacturers data check list. Page 8-8 shows this type of data.

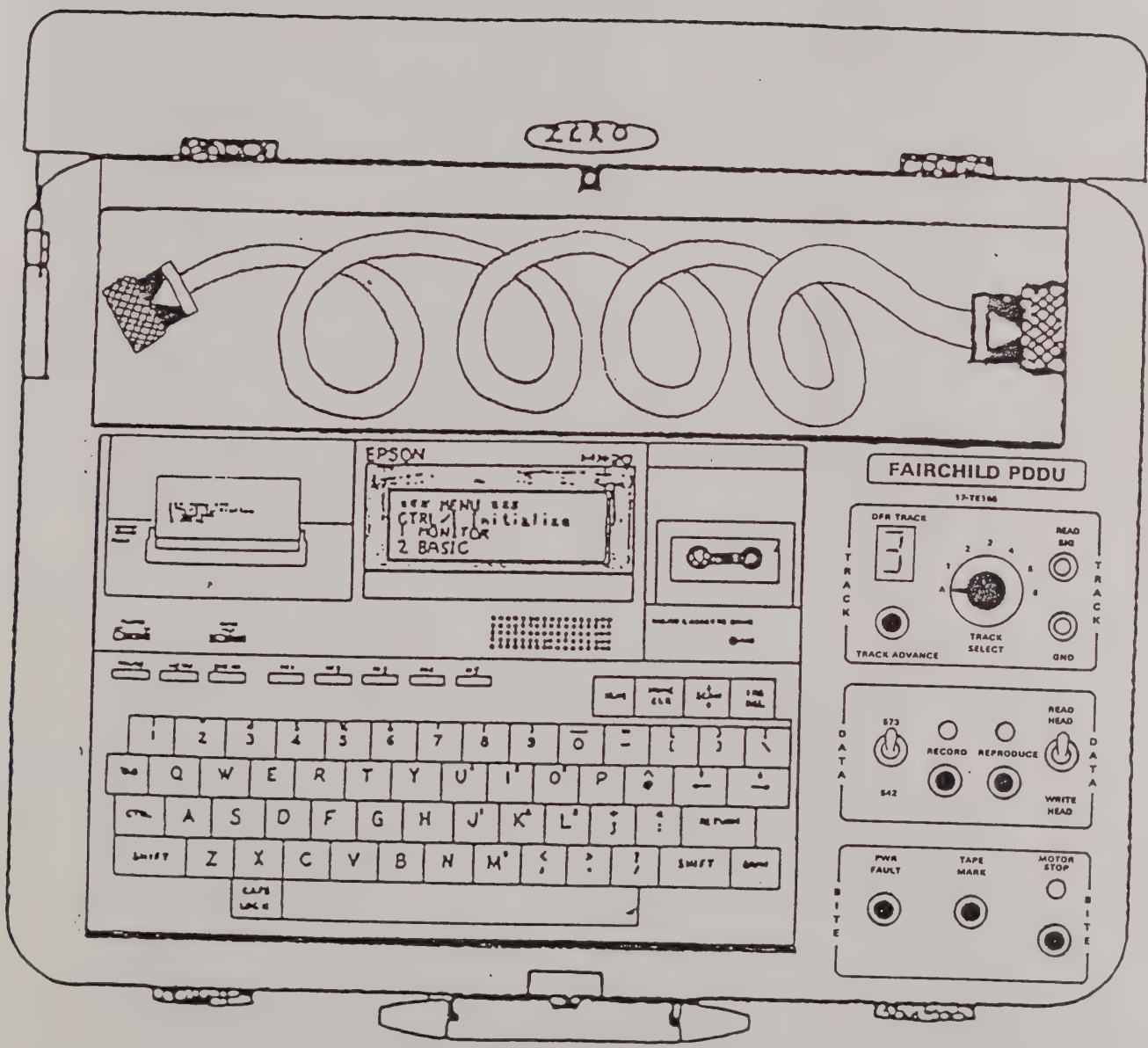

PDDU - PORTABLE DATA DISPLAY UNIT (17-TE165)

DFR SYSTEM - CONNECTION OF PORTABLE DATA DISPLAY UNIT (PDDU) IN AIRCRAFT

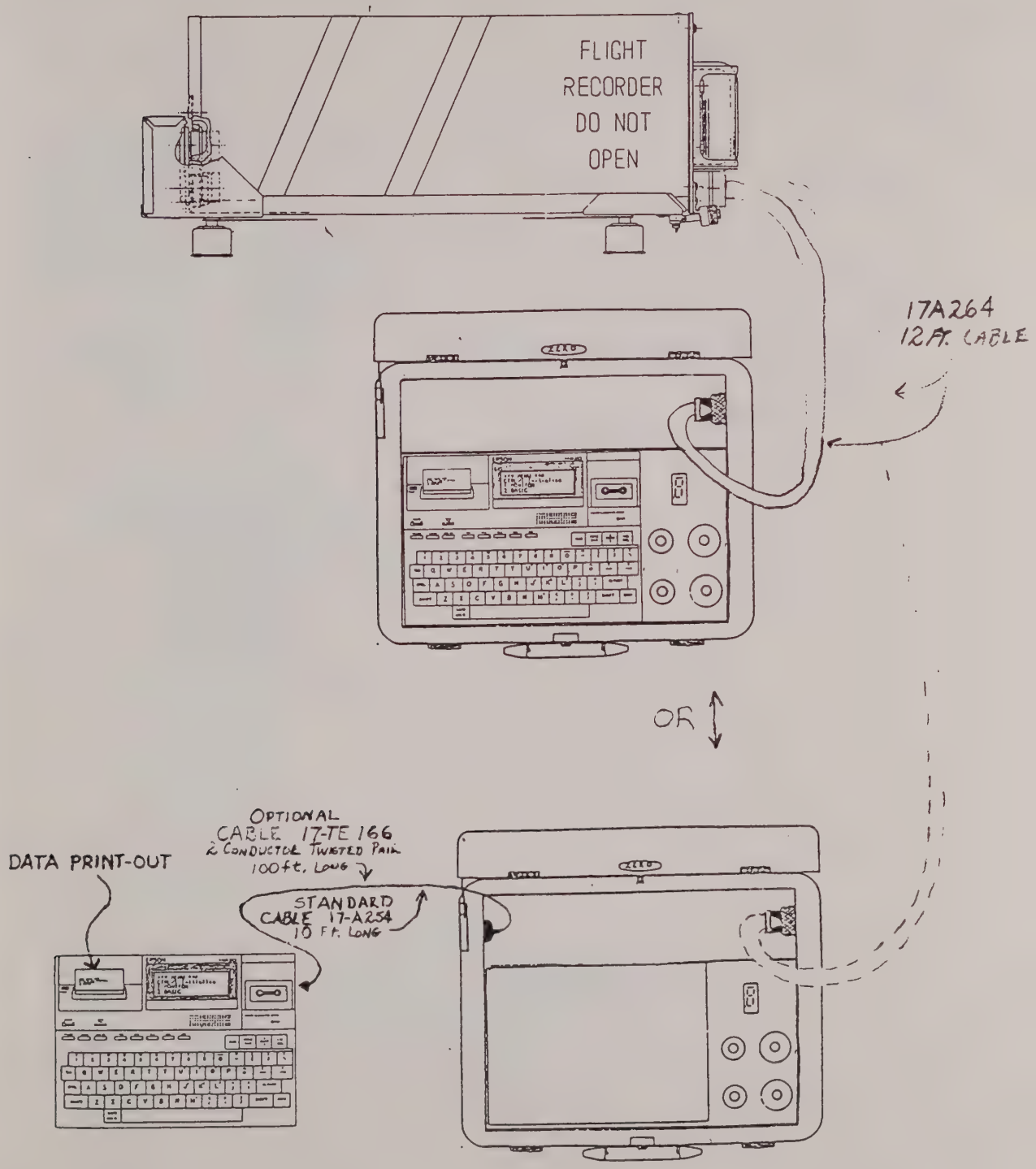

USED FOR DATA ANALYSIS. COMPUTER MAY BE USED REMOTE FROM CASE UP TO 500FT. EXAMPLE: MONITOR DATA FROM COCKPIT WITH CASE ATTACHED TO DFR.

DIGITAL FLIGHT RECORDER UNDER TEST

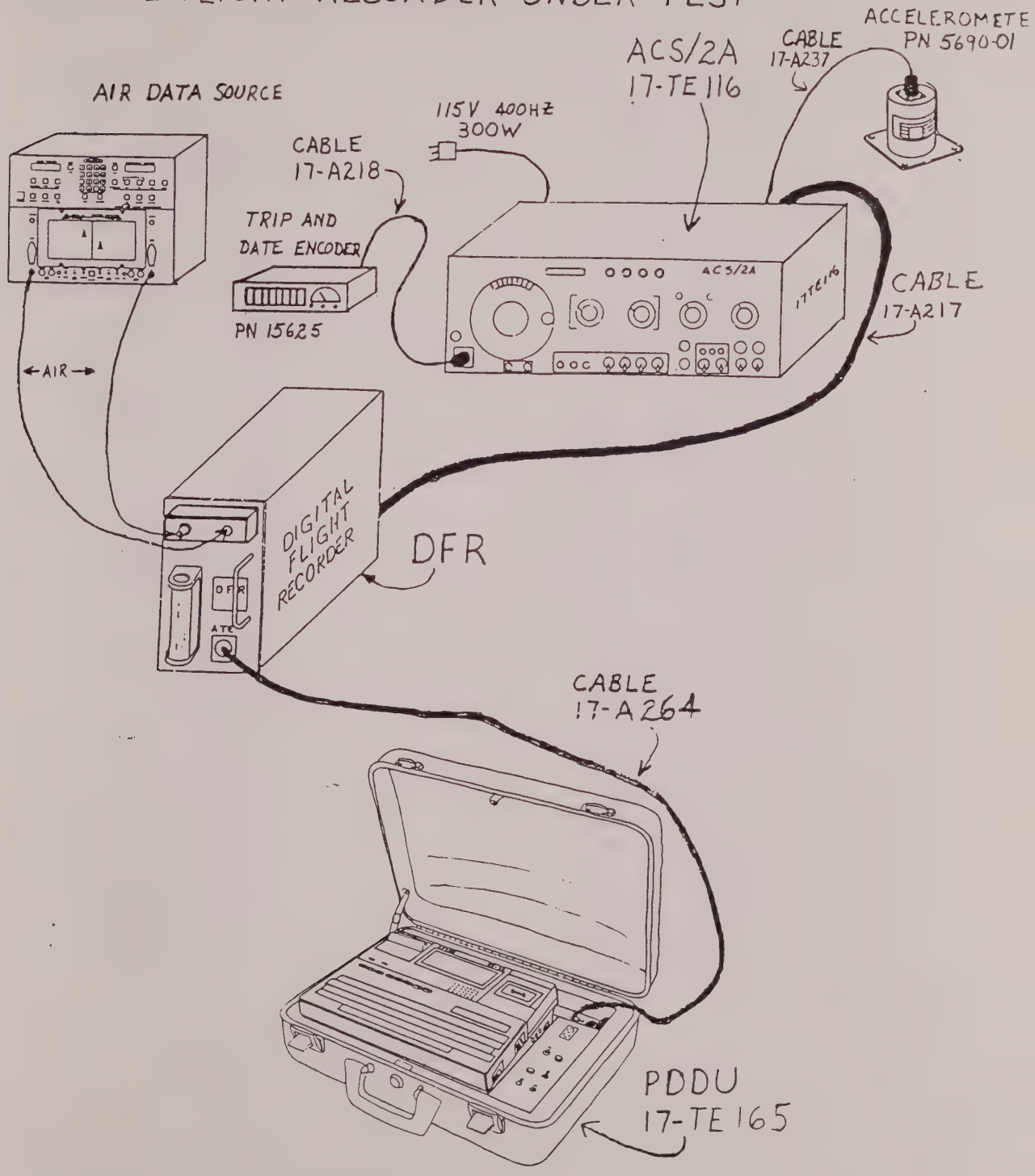

FAIRCHILD
AVIATION RECORDERS

FAR 01070883

SECTION

```
05/20/83
09:10:45
AIRCRAFT #----------
TYPE       ----------

    ♦FAIRCHILD♦
 AVIATION RECORDERS
-

     ARINC 542
     RAW    DATA

0 1 2650D   0 2 3788D
0 3 3788D   0 4    0D
0 5 3824D   0 6  137D
0 7  511D   0 8 2057D
0 9 3792D   0 1 2650D
0 2 3788D   0 3 3788D
0 4    0D   0 5 3824D
0 6  137D   0 7  512D
0 8 2057D   0 9 3824D
0 1 2650D   0 2 3788D
0 3 3788D   0 4    0D
0 5 3824D   0 6  137D

0 2 73140   0 3 73200
0 4    00   0 5 73600
0 6  2110   0 7 10040
0 8 40110   0 9 73600
0 1 51320   0 2 73200
0 3 73140   0 4    00
0 5 73600   0 6  2110
0 7 10050   0 8 40110
0 9 73600   0 1 51320
0 2 73140   0 3 73140
0 4    00   0 5 73600
0 6  2110   0 7 10060

0 8 100000001001B
0 9 111011110000B
0 1 101001011010B
0 2 111011001100B
0 3 111011001100B
0 4 000000000000B
0 5 111011110000B
0 6 000010001001B
0 7 001000001001B
0 8 100000001001B
0 9 111011110000B
0 1 101001011010B
0 2 111011010000B
0 3 111011010000B
0 4 000000000000B
0 5 111011110000B
0 6 000010001001B
0 7 001000001011B
0 8 100000001001B
0 9 111011110000B
```

RAW DATA

```
05/20/83
09:02:17
AIRCRAFT#----------
TYPE       ----------

   ♦ FAIRCHILD ♦
 AVIATION RECORDERS
-

     ARINC
 542 PNEUMATIC

* TIM 4610 ALC  -196
  ALF  -196 AIR   0.0
  HDG 270.0 VA1 +5.96
  VA2 +5.96 B10000100
* TIM 4620 ALC  -196
  ALF  -196 AIR   0.0
  HDG 270.0 VA1 +5.96
  VA2 +5.96 B10000100
* TIM 4630 ALC  -196
  ALF  -196 AIR   0.0
  HDG 270.0 VA1 +5.96
  VA2 +5.96 B10000100
* TIM 4640 ALC  -196
  ALF  -196 AIR   0.0
  HDG 270.0 VA1 +5.96
  VA2 +5.96 B10000100
* TIM 4660 ALC  -196
  ALF  -196 AIR   0.0
  HDG 270.0 VA1 +5.96
  VA2 +5.96 B10000100
* TIM 4670 ALC  -196
  ALF  -196 AIR   0.0
  HDG 270.0 VA1 +5.96
  VA2 +5.96 B10000100
* TIM 4680 ALC  -196
  ALF  -196 AIR   0.0
  HDG 270.0 VA1 +5.96
  VA2 +5.96 B10000100
* TIM 4700 ALC  -196
  ALF  -196 AIR   0.0
  HDG 270.0 VA1 +5.96
  VA2 +5.96 B10000100
* TIM 4710 ALC  -196
  ALF  -196 AIR   0.0
  HDG 270.0 VA1 +5.96
  VA2 +5.96 B10000100
* TIM 4720 ALC  -196
  ALF  -196 AIR   0.0
  HDG 270.0 VA1 +5.96
  VA2 +5.96 B10000100
* TIM 4730 ALC  -196
  ALF  -196 AIR   0.0
  HDG 270.0 VA1 +5.96
  VA2 +5.96 B10000100
* TIM 4750 ALC  -196
  ALF  -196 AIR   0.0
  HDG 270.0 VA1 +5.96
  VA2 +5.96 B10000100
* TIM 4760 ALC  -196
  ALF  -196 AIR   0.0
  HDG 270.0 VA1 +5.96
  VA2 +5.96 B10000100
```

FLIGHT DATA

PDDU - DATA READOUT

Obtained in aircraft or on test bench

SELECT MODE: ARINC 542 and:

1. RAW DATA VALUES

   Top = Decimal
   Center = Octal

2. ENGINEERING VALUES

   Actual Flight Parameters

```
05/20/83
01:12:43
-
    *FAIRCHILD*
 AVIATION RECORDERS
-
      DIGITAL
  FLIGHT RECORDER
    AIRINC 542P_
        DFR
 ON BOARD AIRCRAFT
     FUNCTIONAL
       TEST_
AIRCRAFT#__________
TYPE      ___________

   10 DATA FRAMES
     EVALUATED
   NO ERRORS FOUND_

MIC KEY VERIFIED
T/D ENCODER VERIFIED
-
TEST COMPLETED  PASS
-

LOCATION DEPENDENT
PARAMETER CHECK

 HEAD (DFR)        90 □
      (COCKPIT) _______
ALT-F (DFR)      1116 FT
      (COCKPIT) _______

SAMPLE DATA OUTPUT

FRAME #1        FRAME #10
 TIM  150        TIM  150
 ALC 1116        ALC 1116
 ALF 1116        ALF 1116
 AIR 27.3        AIR 27.3
 HDG 90.0        HDG 90.0
 VA1+1.00        VA1+1.00
 VA2+1.00        VA2+1.00

TEST PERFORMED BY

--------------------

05/20/83
01:15:05
```

3. PORTABLE DATA DISPLAY UNIT (PDDU)

DFR Installation evaluation confirming validity of parameters and system function with DFR installed in aircraft.

SECTION 3

HX-20 OPERATION:

Upon power up, the HX-20 becomes a menu-driven device. This menu which lists the jobs the HX-20 may perform appears on the unit's LCD screen. An adjustment to the screen's viewing angle may be performed (if needed), by rotating the View Angle control which is located on the units' right side. This adjustment may be made at any time to ensure maximum clarity and sharpness of display characters.
(Figure 1 depicts the menu generation and selectable operator options during the power-up cycle).

MENU OPTIONS:

The menu displayed usually consists of (4) four lines with each line specifying the key (operator input) and the job associated with that key.

1. MONITOR

   Entering a "1" from the keyboard accesses the monitor This software program allows entry and/or modifications to machine language programs.

   This function is not utilized as all machine-language programs are loaded and executed by the resident user program.

   In the event, Monitor was inadvertently selected, return to the menu may be accomplished by depressing 'MENU'.

2. BASIC

   Entering a '2' from the keyboard accesses the Basic interpreter. This interpreter allows entry, change and execution of Basic programs. This function, however will be used only to control the microcassette when loading a new program into memory. This will be discussed in detail in subsequent paragraphs.

3. USER PROGRAM

   Entering a '3' from the keyboard causes the execution of a user program that is resident (already loaded) in the HX-20 memory. (Refer to the appropriate program documentation).

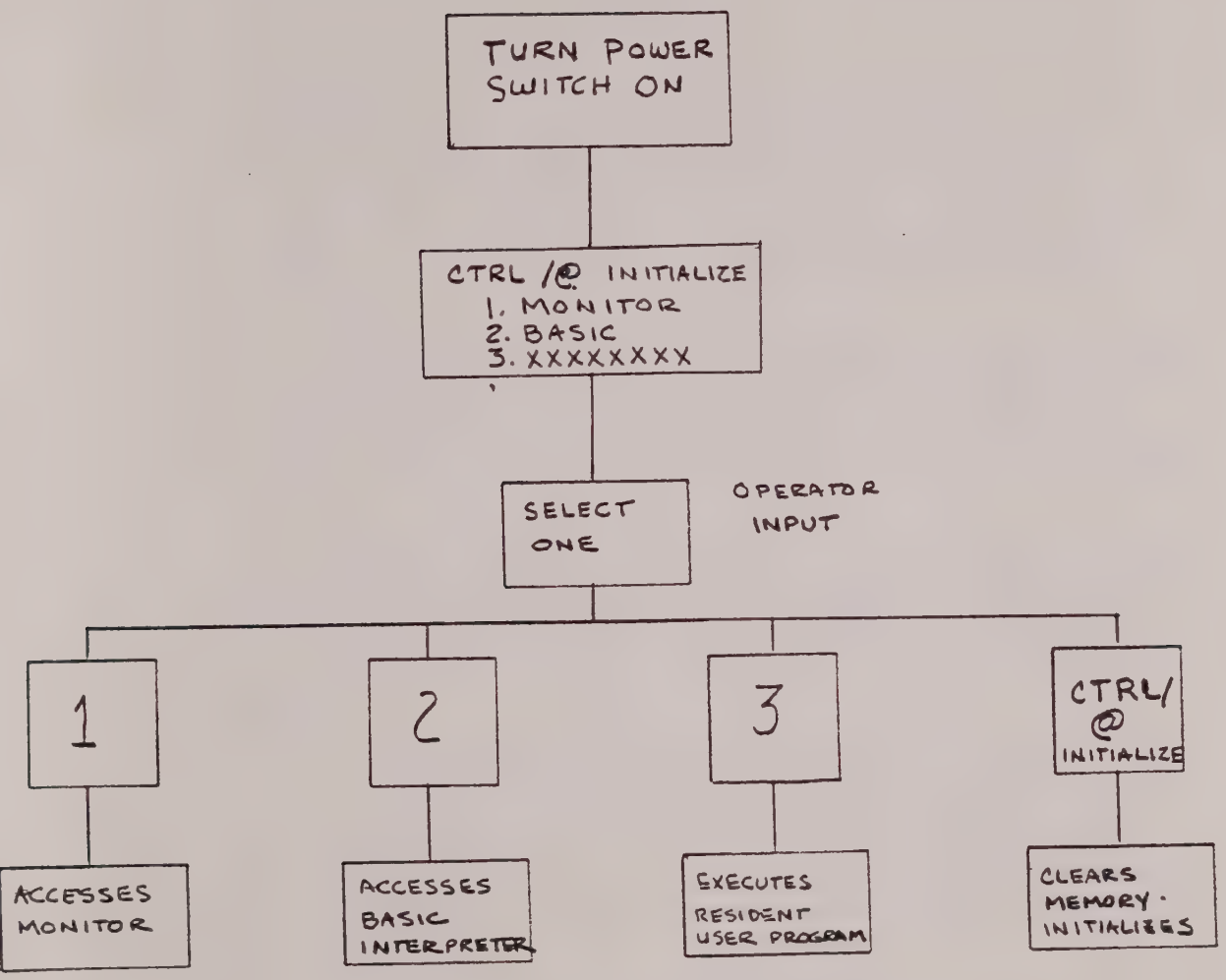

FIG. 1 HX-20 OPERATION

SECTION 3

4. INITIALIZE

Entering an '@' with the CTRL key already depressed will place the HX-20 into the system initialization entry mode. As the system initialization will result in the clearing of the entire HX-20 memory, the ability to abort and preserve memory contents is offered.

To initialize and clear memory, the present date and time must be entered. This will set the HX-20's internal calendar clock, enabling it to keep track of the date and time from this moment on, whether the HX-20 is turned on or not.

To abort the initialization mode, press either the BREAK or MENU keys. Either one will result in the display of the MENU with all program and data previously entered into the HX-20 undisturbed.

GETTING STARTED

If the HX-20 has not been initialized, or the internal calendar clock is to be reset, or in the event memory contents vital to normal system operation have been altered, proceed with the Initialization procedure outlined in Step 4 (above). Memory alteration which effects system operation usually results in the menu being effected which can be readily seen in the resultant display.

Re-initializing causes the operating system to refresh all pointers, vectors etc. required for normal operation.

Once, initialized, select (2) Basic from the menu. The system will access the Basic Interpreter and then be placed in the Command Mode (individual Basic commands may now be executed).

WIND:

Assuming the Microcassette is loaded with the appropriate tape, the operator will input WIND <CR>. This command will instruct the HX-20 to rewind the microcassette to the beginning of the tape (BOT) and reset the internal TAPCNT (tape count) to (0) zero, while the <CR> (return) signifies termination of input. (The Microcassette tape has been furnished with a BOOT program which will enable access to any program recorded on the tape.)

SECTION 3

Once at BOT, a prompt (>) will appear on the LCD screen below the WIND entry. This now indicates the HX-20 is ready for another command (input).

LOAD:

The operator now inputs LOAD <CR>. This command will result in the HX-20 searching the tape for the next BASIC program. As it encounters the header record, it will display 'BOOT' on the screen and continue to read the program into memory. In approximately 10 secs., the prompt (>) should reappear indicating the command being completed.

RUN:

To execute the BOOT program now residing in memory, the operator need only to press the PF5 key or type RUN<CR>.

PROGRAM SELECTION:

The LCD screen will now display a menu of all operator selectable programs residing on tape. When the desired program is selected by the operator from the menu, the BOOT program will automatically process the tape (in the fast forward mode) to the point on tape where the program resides and then load it into memory.

RUN:

When the prompt (>) once again appears, the program may be executed by pressing the PF5 key or typing RUN<CR>.

The actual loading time is a function of program length and will vary from 1 - 2½ minutes. Once the selected program is run, the required operator inputs will also vary. (Refer to specific program documentation.)

The keyboard entries as specified in the preceding paragraphs are all that are necessary for loading and execution of the software programs supplied with the Portable Data Display Unit (PDDU).

Keyboard entries as a rule are inhibited when program execution is in process, however, the inadvertent activation of the following keys may cause undesirable results:

SECTION 3

PAUSE

The purpose of this key is to allow the operator to alter the scrolling rate of data displayed on the LCD screen. Following the activation of the pause key, program execution will halt. An entry of 0 to 9 will change the rate (0 sets the lowest rate while 9 sets the fastest. Other keys set intermediate rates). The default rate is the fastest (9). Any other key will cause the program to continue with the rate unchanged.

MENU

This key will cause suspension of program execution and a return to the original menu. (Similar to power-up.)

BREAK

This key interrupts the operation in progress. This could be a program, microcassette or printer operation. The HX-20 will return to BASIC in the command mode. Program execution may be restarted by activating PF5 or typing RUN<CR>.

CTRL/PF2 (Copy)

Depressing both keys simultaneously will cause the screen display to be copied to the microprinter. (If the printer is off, the command will be ignored.)

RESET

This pushbutton located on the right side (at the top), will cause the initialization of internal HX-20 circuits, such as is caused when power is first turned on. A similar menu will then be displayed. It may also be used in the event the LCD screen is not cleared when power is turned off; the screen may then be cleared by activating the reset switch. This switch may also be used to halt any uncontrolled operation when power is first turned on.

The HX-20 is intended to be operated from its internal battery-powered supply. Internal circuitry continually monitors the battery voltage. When the batteries need charging, the operation in progress will be interrupted and a warning 'CHARGE BATTERY' will be flashed 60 times on the LCD screen

with the power then turned off automatically. The batteries may then be charged with the AC adapter supplied, from any 115V/60 cycle source. Complete charging will be accomplished in (8) eight hours and care must be taken to prevent overcharging and the resultant decay of battery life. Depending on HX-20 use (printer and microcassette operation), fully charged batteries will last up to 50 hours of normal use before requiring re-charge. (Refer to HX-20 operations manual for more detail.) While not in operation, any internally stored program (in memory) will be protected for many months.

D. Digital Recording

(1) The DFR uses a saturation method to record digital data on magnetic tape. With this method, the information is contained in the pattern of flux reversals rather than the actual polarity of the magnetic flux. The signals from the preamplifier last only as long as it takes the flux reversals to move past the gap. The shapes of these signals are determined by the read head. Figure 4 shows the shape of playback flux reversals. The signature of a single isolated flux reversal has broad gently sloping skirts.

(2) The signature for Harvard biphase shows the flux reversals beginning to crowd. Biphase is used for low-density recording because its transitions occur at the beginning of each bit cell making it self-clocking and simple to recover.

(3) Since the 573 mode is recorded at 960 bits per second, the low density Harvard biphase cannot be used. Mode 573 is formatted using non-return to zero mark (NRZ-M), allowing for higher density recording. A logic one is represented by a transition, while a zero is represented by no transitions. The bit rate is eight times 542 rate while the transitions are only four times as close together. (Ref. Fig. 4.) A clock synchronized on the one transition is needed to remove jitter due to pulse crowding.

(4) During the recording of actual aircraft parameters, long streams of zeros can occur. Aircraft vibrations lead to slight irregularities in the tape motion, making recovery of data beyond four or five zeros impossible. In the 573 mode, the DFR uses group code recording (GCR) to combat this problem. Group code recording replaces 4-bit input nibbles with 5-bit groups. These 5-bit groups are arranged so that within each group no more than two zeros ever occur in a row. The 768-bit per second Harvard biphase data from the FDAU is formatted as 960-bit per second NRZ-M for recording. The RDU reads the NRZ-M signal and reconstructs it as a usable digital code for computer analysis and display.

2. Overall Block Diagram (Ref. Fig. 5.)

Control signals from front panel are used for track select, format, and dump speed. Read amplifier accepts analog data from the read heads and, after amplification, outputs the data to an external computer for analysis

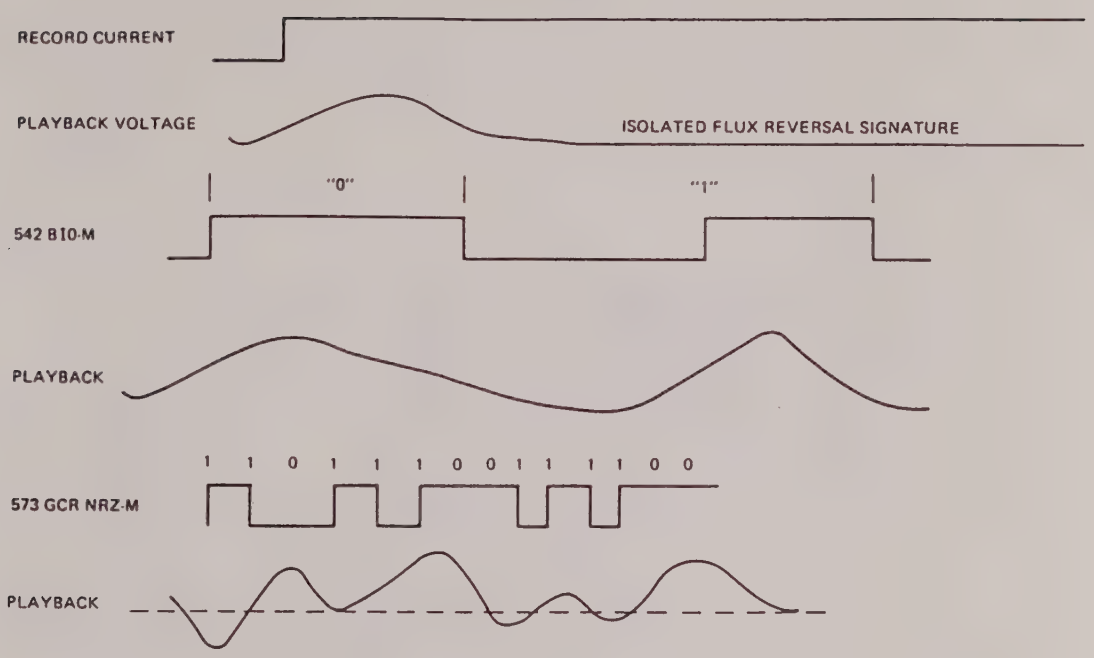

Playback Wave Shapes
Figure 4

and display or applied to the bit sync board. If 542 data is read from the magnetic tape, it is sent directly from the read amplifier to the external computer. Any 573 data read from the tape must be formatted into a digital code usable by the computer. Bit sync board receives the amplified data from the read amplifier and formats the data to be used by the computer.

3. Detailed Theory

The following paragraphs describe the RDU, addressing each card separately.

A. Bit Sync

NOTE: All test point (TP) waveforms are shown in Figure 6.

(1) The function of the bit sync card is to remove jitter caused by pulse crowding by detecting and synchronizing on transitions or flux reversals. This synchronization is required to reconstruct 573 data transitions at precise regular intervals.

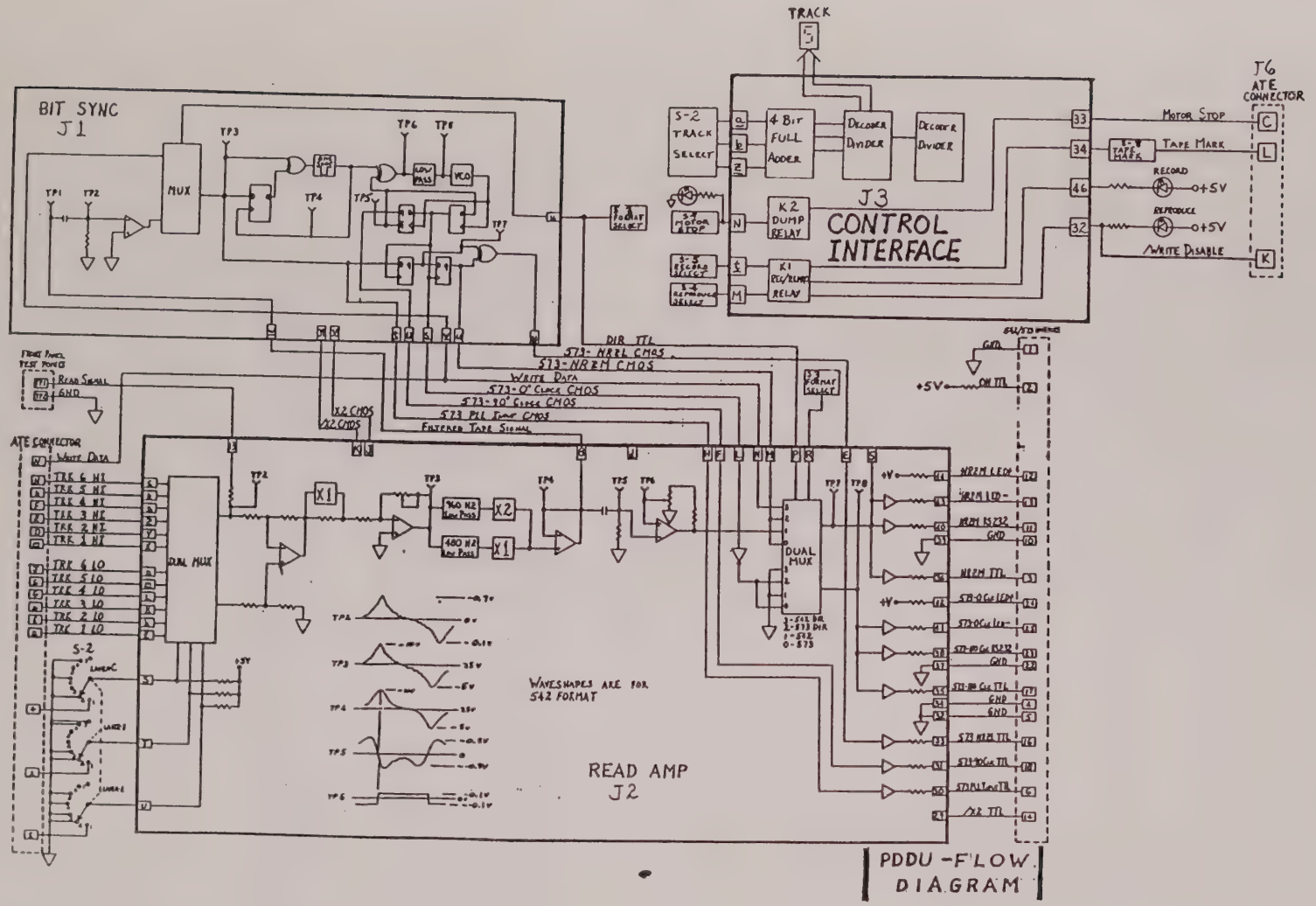
TRACK
BIT SYNC
J1
MUX
VCO
LOW PASS
S-2
TRACK
SELECT
4 BIT
FULL
ADDER
DECODER
DIVIDER
DECODER
DIVIDER
K2
DUMP
RELAY
K1
REC/PLAY
RELAY
J3
CONTROL
INTERFACE
J6
ATE
CONNECTOR
MOTOR STOP
TAPE MARK
RECORD
+5V
REPRODUCE
+5V
/WRITE DISABLE
DIR TTL
S73- NRZI CMOS
S73-NRZM CMOS
WRITE DATA
S73-0° CLOCK CMOS
S73-90° CLOCK CMOS
S73 PLL TIMING CMOS
FILTERED TAPE SIGNAL
X2 CMOS
/X2 CMOS
ATE CONNECTOR
READ SIGNAL
GND
WRITE DATA
TRK 6 HI
TRK 5 HI
TRK 4 HI
TRK 3 HI
TRK 2 HI
TRK 1 HI
TRK 6 LO
TRK 5 LO
TRK 4 LO
TRK 3 LO
TRK 2 LO
TRK 1 LO
DUAL MUX
S-2
X1
X2
X1
DUAL MUX
WAVESHAPES ARE FOR
542 FORMAT
READ AMP
J2
+5V
NRZM LED+
NRZM LED-
NRZM RS232
GND
NRZM TTL
+5V
S73-0° CLK LED+
S73-0° CLK LED-
S73-90° CLK RS232
GND
S73-90° CLK TTL
GND
GND
S73 NRZI TTL
S73 /NRZI TTL
S73 PLL TIMING TTL
/X2 TTL
PDDU - FLOW
DIAGRAM

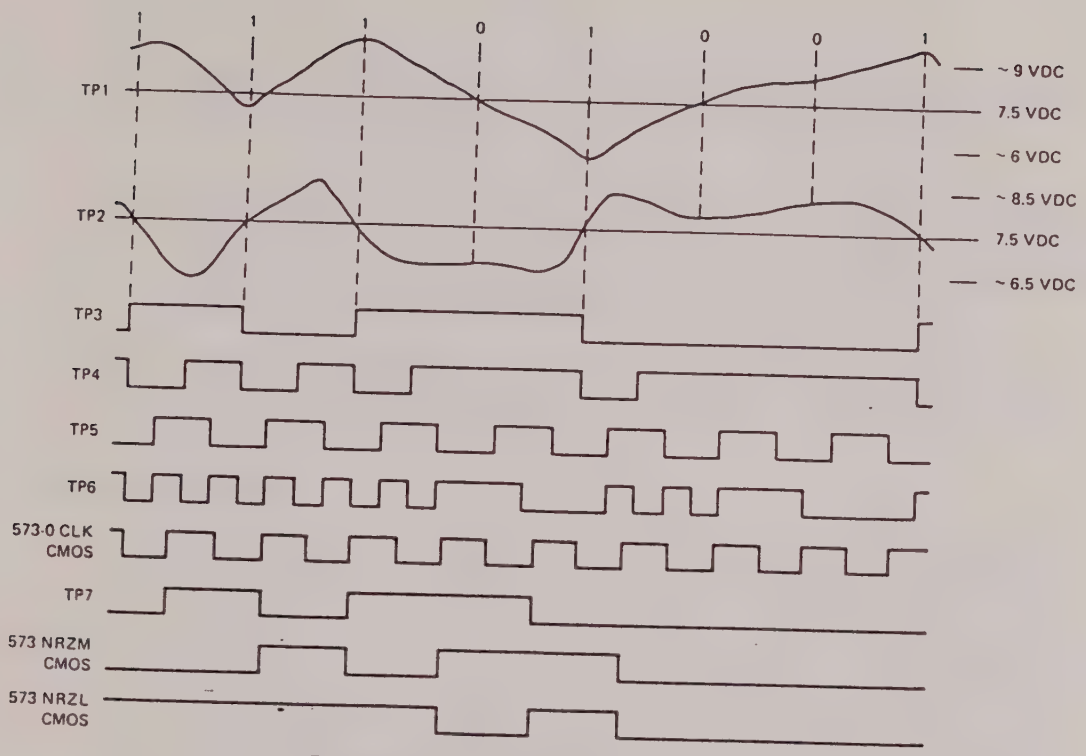

Bit Sync TP Waveforms
Figure 6

(2) Input flux reversals from the tape at TP1 are differentiated by C1 to zero crossing at TP2. The differentiated signal is applied to comparator U1A to form a square wave and passed on to MUX U2 inputs. The output of the MUX at TP3 is applied to the D input of flip-flop U3A and one input of an exlusive OR gate U4A. The other input of gate U4A receives the Q output from flip-flop U3A. The output of the exclusive OR is used to fire one-shots U5 and U6. Every transition at TP3 fires the one-shots, using the output frequency to phase lock the clock.

(3) U10A and U10B form a Johnson counter, which is a divide-by-four counter providing outputs at 90° intervals. These outputs are selected so that the 573-0 clock, which clocks TP3 state into the

output string, lags the phase detector at TP5 by 90°. This time is a 1/2-bit period away from zero crossing and represents the best time to determine the polarity for that bit period.

(4) U11A and U11B form a 2-bit shift register that allows exclusive OR U4C to examine two successive bits of the reconstructed NRZ-M string and to generate NRZ-L output. NRZ-M ones are represented by transitions and zeros are represented by no transitions. NRZ-L ones and zeros are represented by logic levels.

(5) MUX U2 also accepts write data to pass through the bit sync. The bit sync circuitry provides the data with a clock and removes any jitter caused by pulse crowding.

B. Read Amplifier

(1) Input MUX U7, under control of TRACK SELECT switch S7, accepts analog signals from the DFR read heads and applies these signals to amplifier U6A. Data can be read from the DFR tape at two speeds (X1, X2) which are controlled by the DUMP SPEED SELECT switch on the RDU. In the X1 playback speed, data is read at the same speed as it was recorded. The signal from MUX U7 is applied to amplifier U6A causing the output to be approximately 5 volts peak-to-peak. The signal is applied to amplifier U4A through bilateral switch U5 for further amplification. The amplified signal is applied at TP3 to a seven-pole low-pass filter (-42 dB per octave) that has -3 dB points at 480 Hz and 960 Hz. In the X2 playback speed, the flux change in the head is twice the rate which causes the output to double. Bilateral switch U5 is open, increasing amplifier U4A input resistance and causing its gain to be reduced by 3/4. This changes the signal level at TP2 from 5 volts peak-to-peak (X1) to 2.5 volts peak-to-peak (X2). This signal is again applied to the seven-pole low-pass filter.

(2) After the signal is filtered and buffered, it is sent to the bit sync and a differentiator (Z12, C1, R1). The output of the differentiator is at TP5 and is the input to Schmitt trigger U8. Figure 7 shows how the filter removes the high frequency fuzz while preserving the shape of the flux reversal signature. At TP5, the differentiated signal develops a small amount of high frequency fuzz and re-establishes the FR as strong zero crossings. When the 0.5-volt peak-to-peak signal at TP5 increases beyond 0.2 volt, the Schmitt trigger fires and remains at TP6 until the signal passes back through zero and beyond the opposite 0.2 volt. (Ref. Fig. 7.)

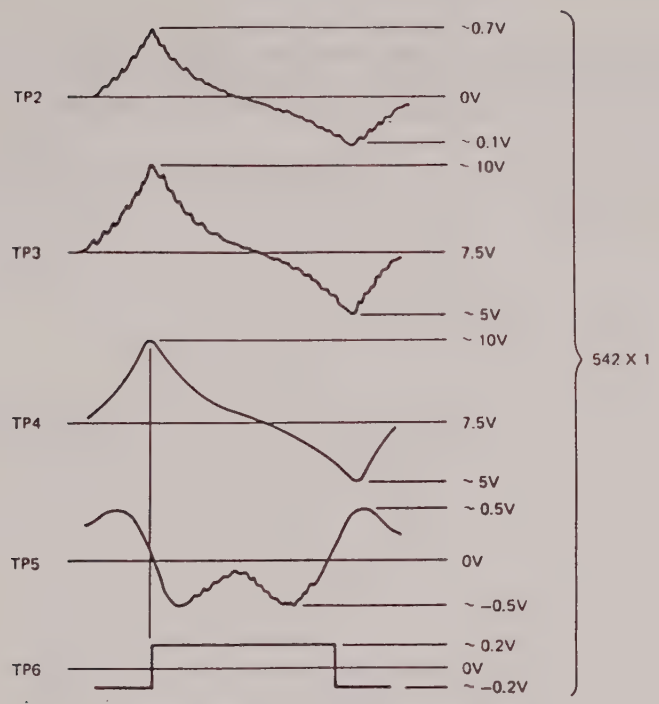

Read Amplifier TP Waveforms
Figure 7

(3) The output of the Schmitt trigger is converted to TTL (Z12, CR1, R5) and applied to MUX U10. This MUX under control of the FORMAT SELECT switch selects the desired format.

C. Control Interface

(1) The control interface examines the track address lines supplied by the DFR and with 4-bit full adder U1 adds a one to the 3-bit address. This changes the 0-5 machine counting convention to normal 1-6 count. The output of the adder is applied to LED driver U2 to drive the seven-segment TRACK display on the front panel. Driver U3 accepts DFR phase line status and drives the PHASE display on the front panel.

(2) Input from S5 energizes relay K1 and latches the DFR in the record mode.

(3) Input from S9 energizes relay K2 allowing for motor stop .

(4) The board contains various pull-up resistors to change switch opens and grounds to TTL ones and zeros. All signals supplied outside the RDU are diode protected.

(5) CR3 through CR6 reduce the +5 volts supplied to the seven-segment display.

FAIRCHILD WESTON
Schlumberger

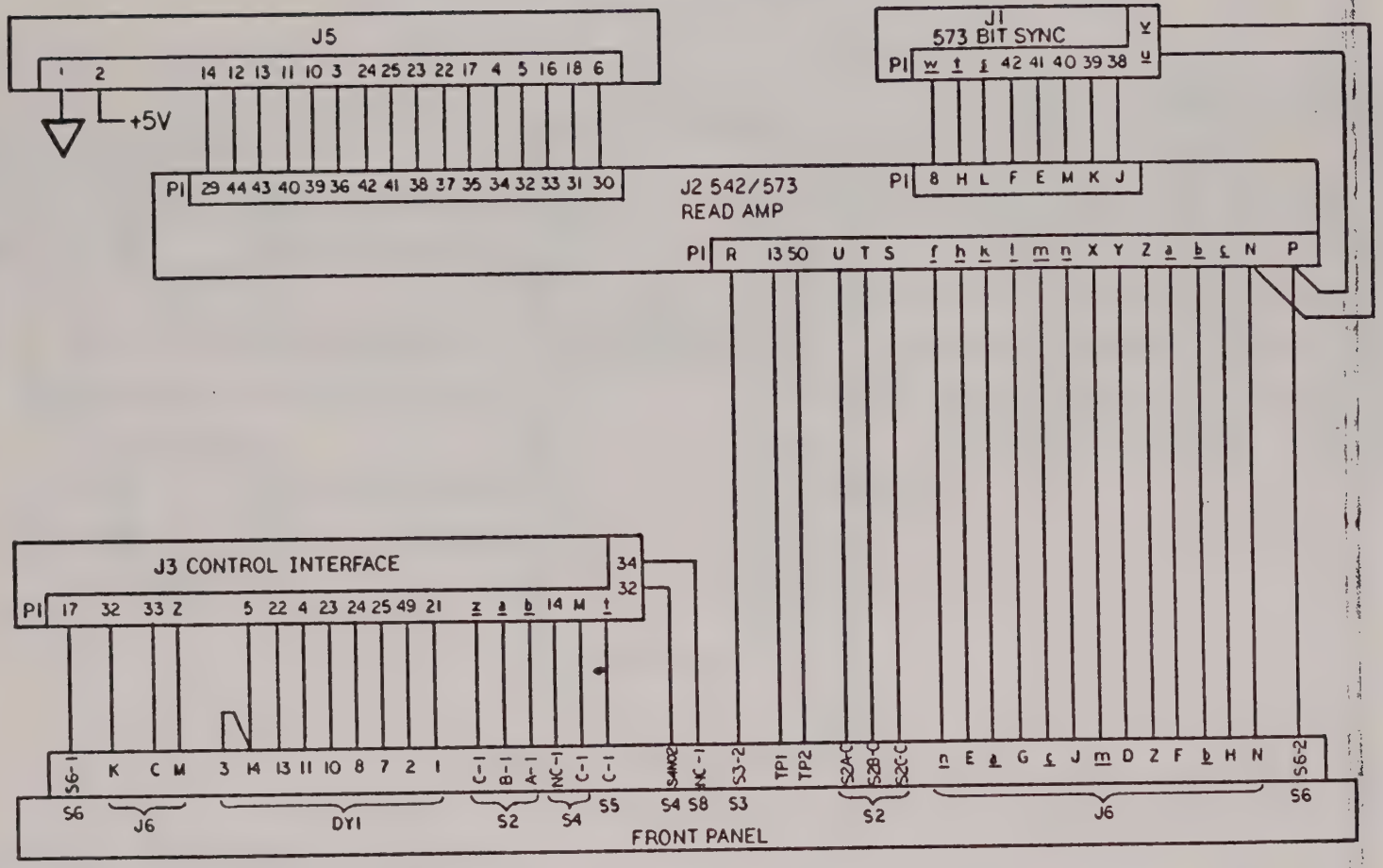

PDDU OVERALL WIRING DIAGRAM
(SHEET 1)

FAIRCHILD WESTON
Schlumberger

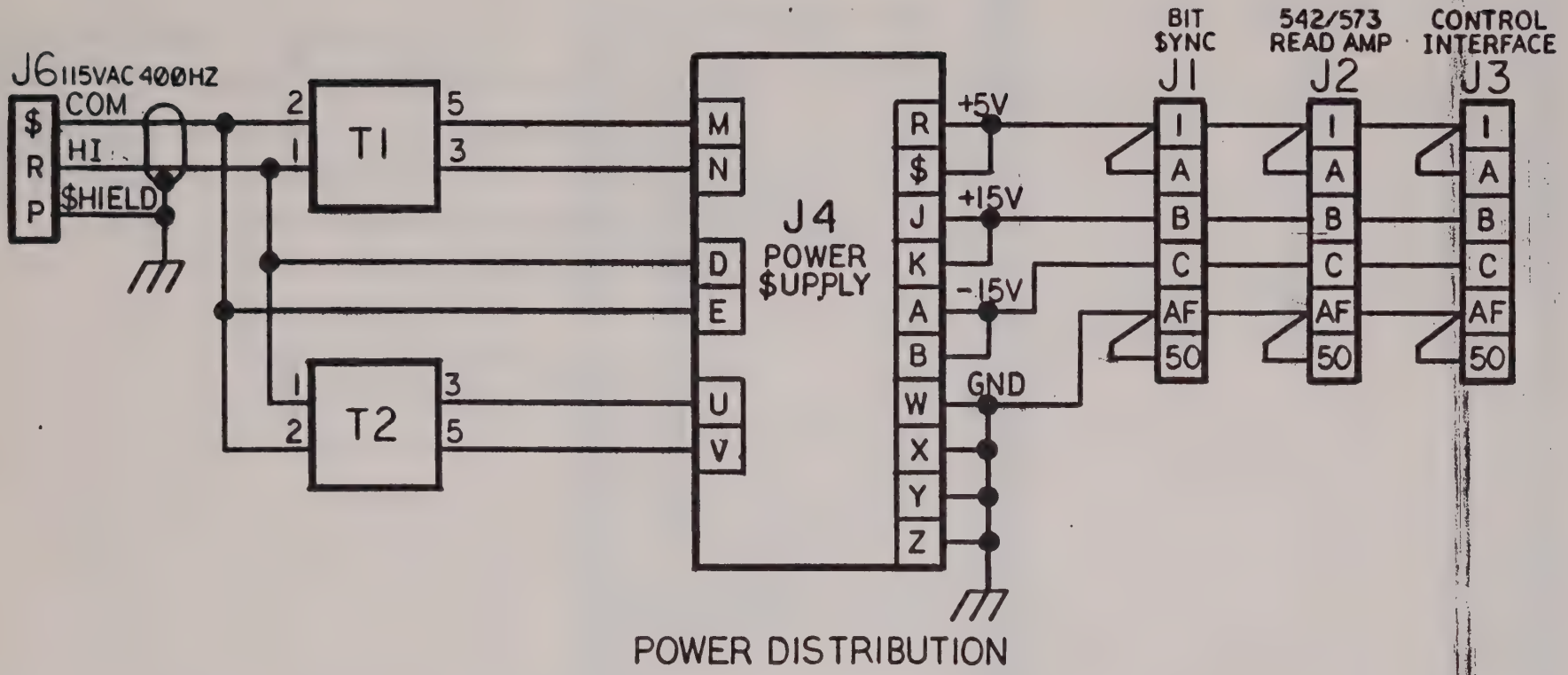

POWER DISTRIBUTION

PDDU OVERALL WIRING DIAGRAM
(SHEET 2)

FAIRCHILD WESTON
Schlumberger

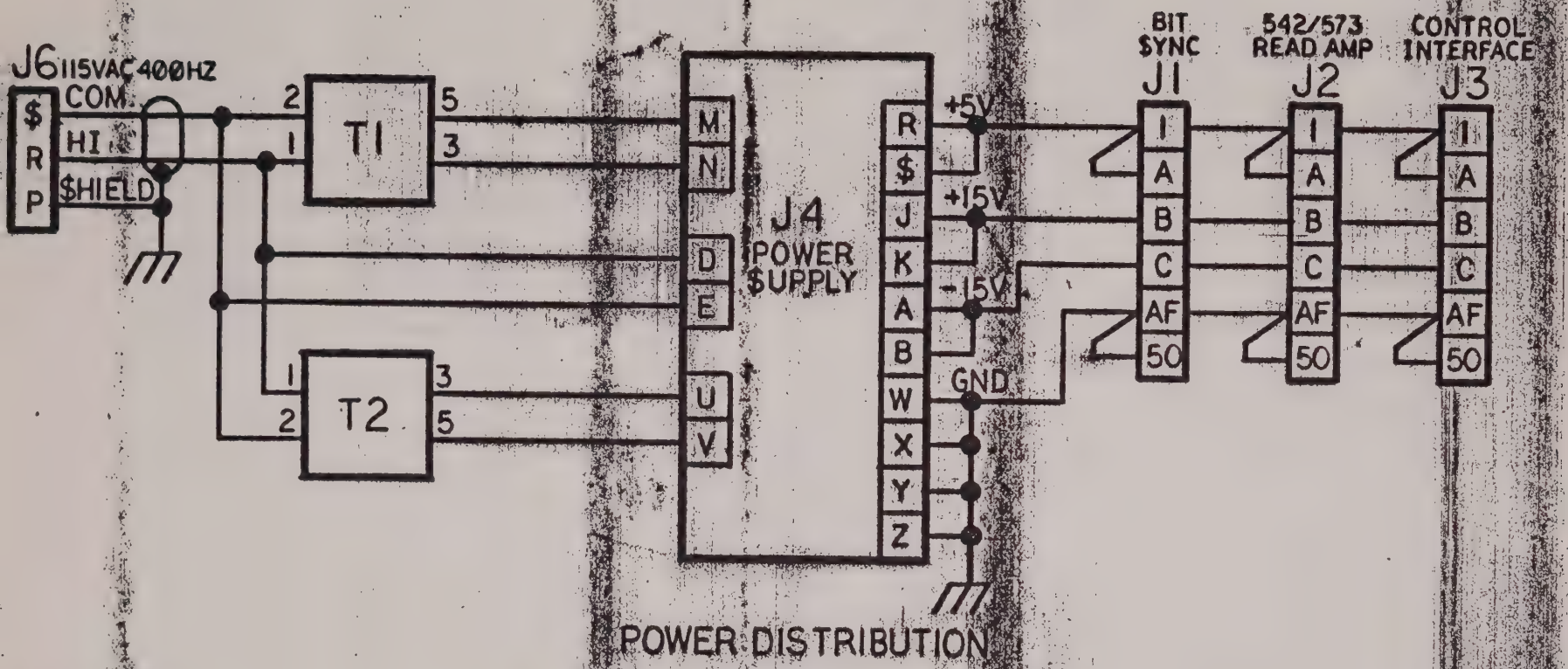

POWER DISTRIBUTION

PDDU OVERALL WIRING DIAGRAM

(SHEET 2)

FAIRCHILD WESTON
Schlumberger

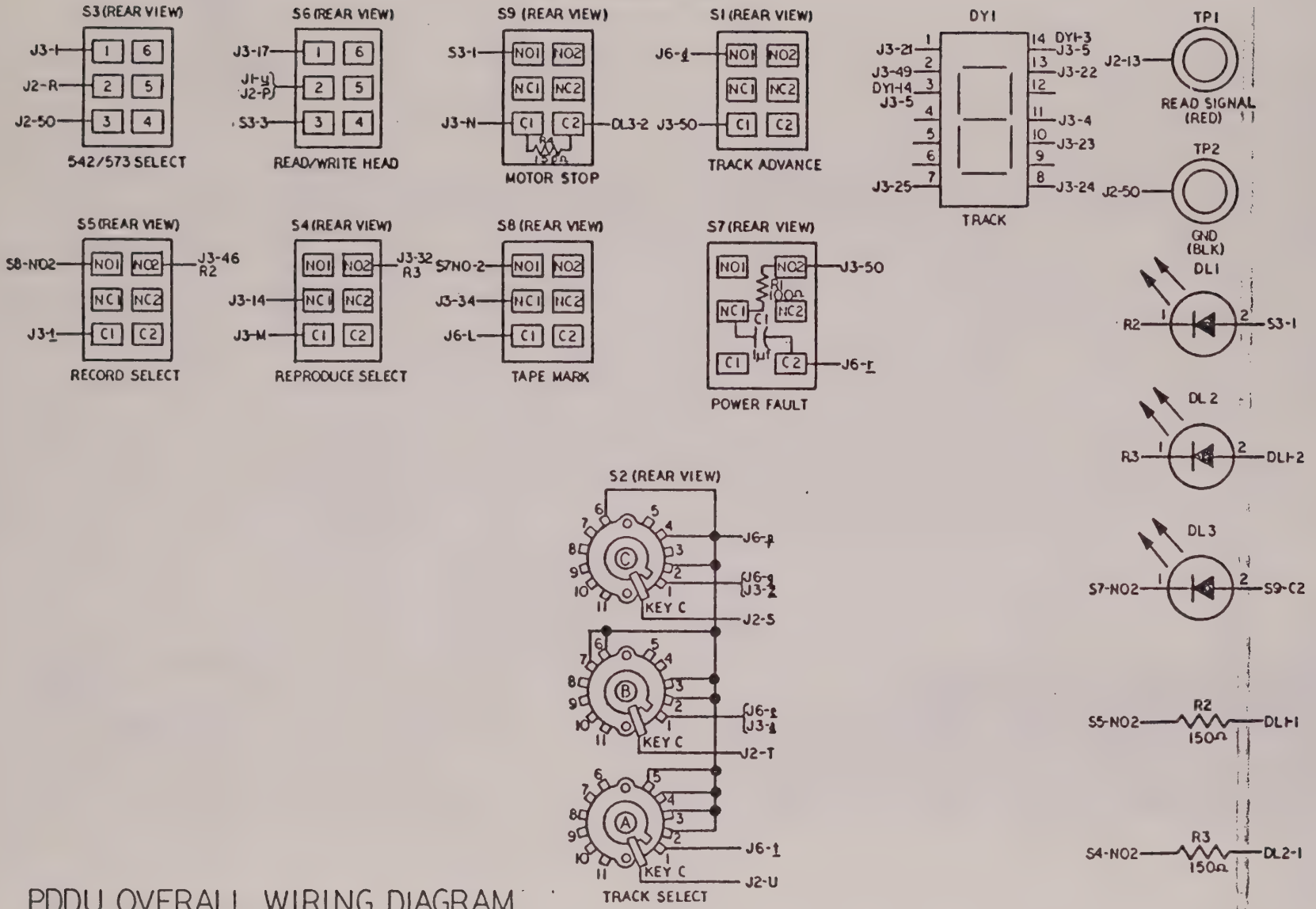

PDDU OVERALL WIRING DIAGRAM
(SHEET 3)

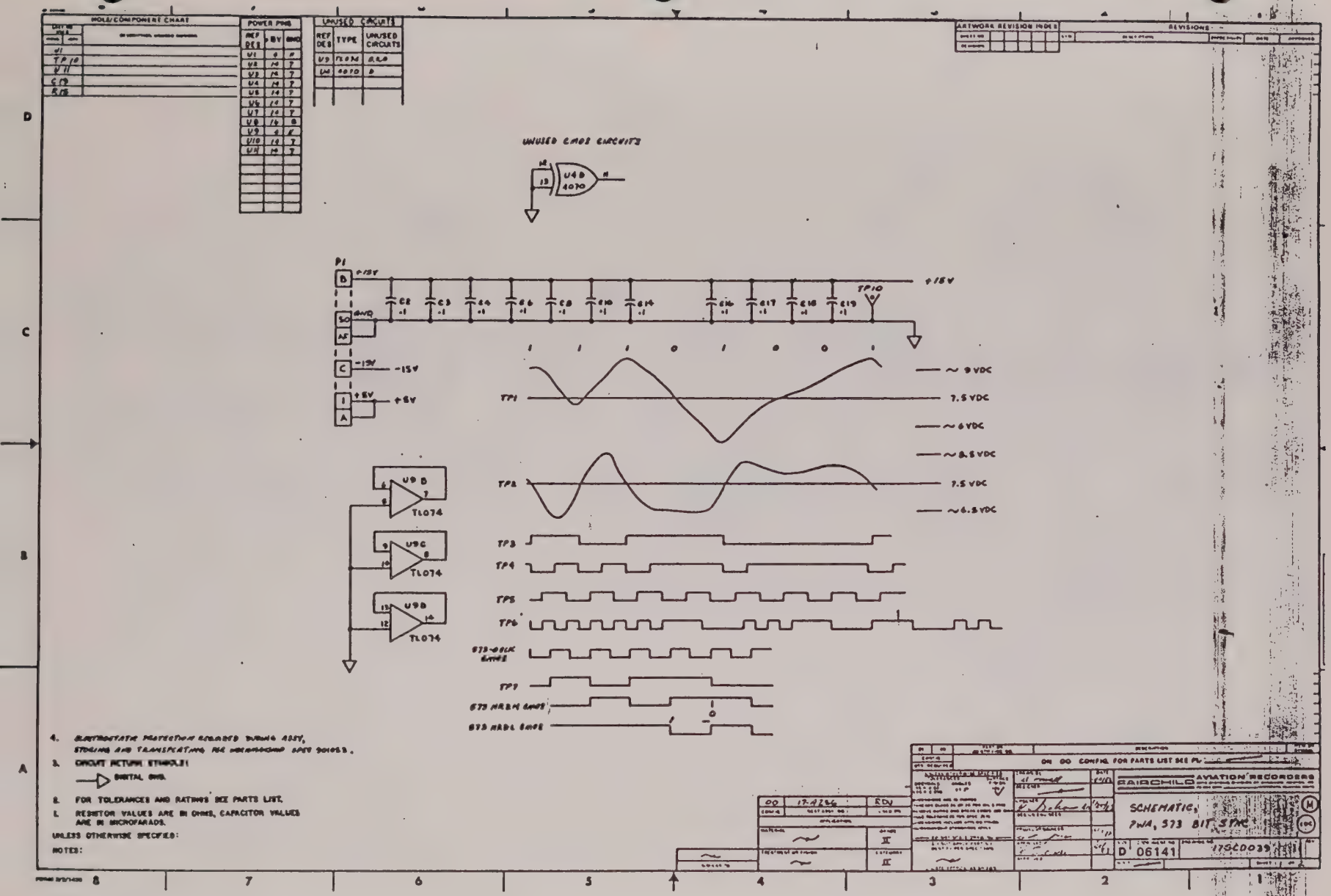

4. ELECTROSTATIC PROTECTION REQUIRED DURING ASSY, STORING AND TRANSPORTING PER WORKMANSHIP SPEC 901053.
3. CIRCUIT RETURN SYMBOLS:
   ⟶▷ DIGITAL GND.
2. FOR TOLERANCES AND RATINGS SEE PARTS LIST.
1. RESISTOR VALUES ARE IN OHMS, CAPACITOR VALUES ARE IN MICROFARADS.

UNLESS OTHERWISE SPECIFIED:

NOTES:

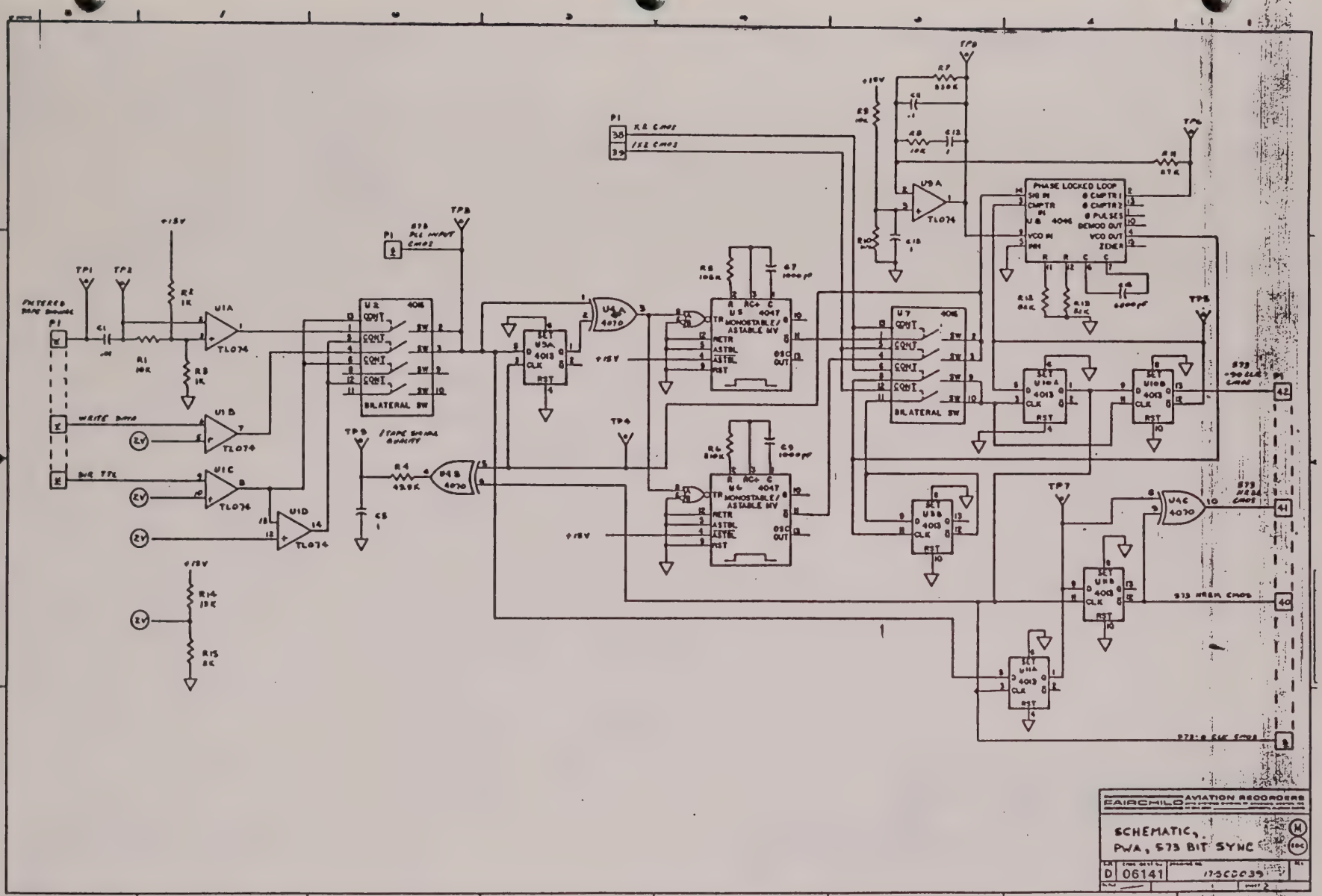
FAIRCHILD AVIATION RECORDERS
SCHEMATIC, PWA, 573 BIT SYNC
D 06141
17300039

HOLE/COMPONENT CHART	
C21	
R32	
TP8	
U12	
P1	
CR43	

UNUSED CIRCUITS		
REF DES	TYPE	UNUSED CIRCUITS
U2	7406	C,E,F
U3	TL074	A,B,C
U12	TL074	A,B

POWER PINS				
REF DES	+5V	GND	+15	-15
U1	14	7		
U2	14	7		
U3		11	4	
U4		11	4	
U5		7	14	
U6		11	4	
U7	16	28		
U8			4	11
U9	16	8		
U10	16	8		
U11	16	28		
U12			4	11

ARTWORK REVISION INDEX

REVISIONS

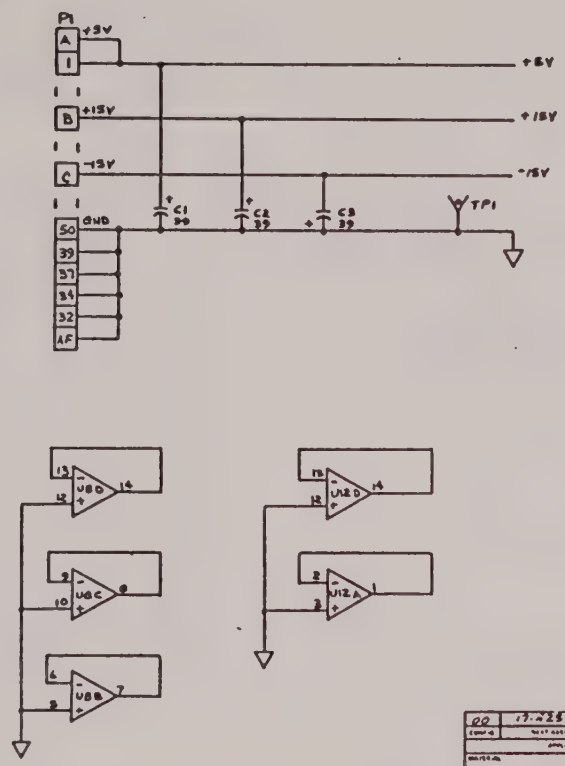

3. CIRCUIT RETURN SYMBOLS:
   ⟶▷ DIGITAL GND.
2. FOR TOLERANCES AND RATINGS SEE PARTS LIST.
1. RESISTOR VALUES ARE IN OHMS, CAPACITOR VALUES ARE IN MICROFARADS.

UNLESS OTHERWISE SPECIFIED:

NOTES:

ON 00 CONFIG. FOR PARTS LIST SEE PL

FAIRCHILD AVIATION RECORDERS

SCHEMATIC, PWA
542/573 READ AMP

D 06141 17-SCD040 A

17-SCD040

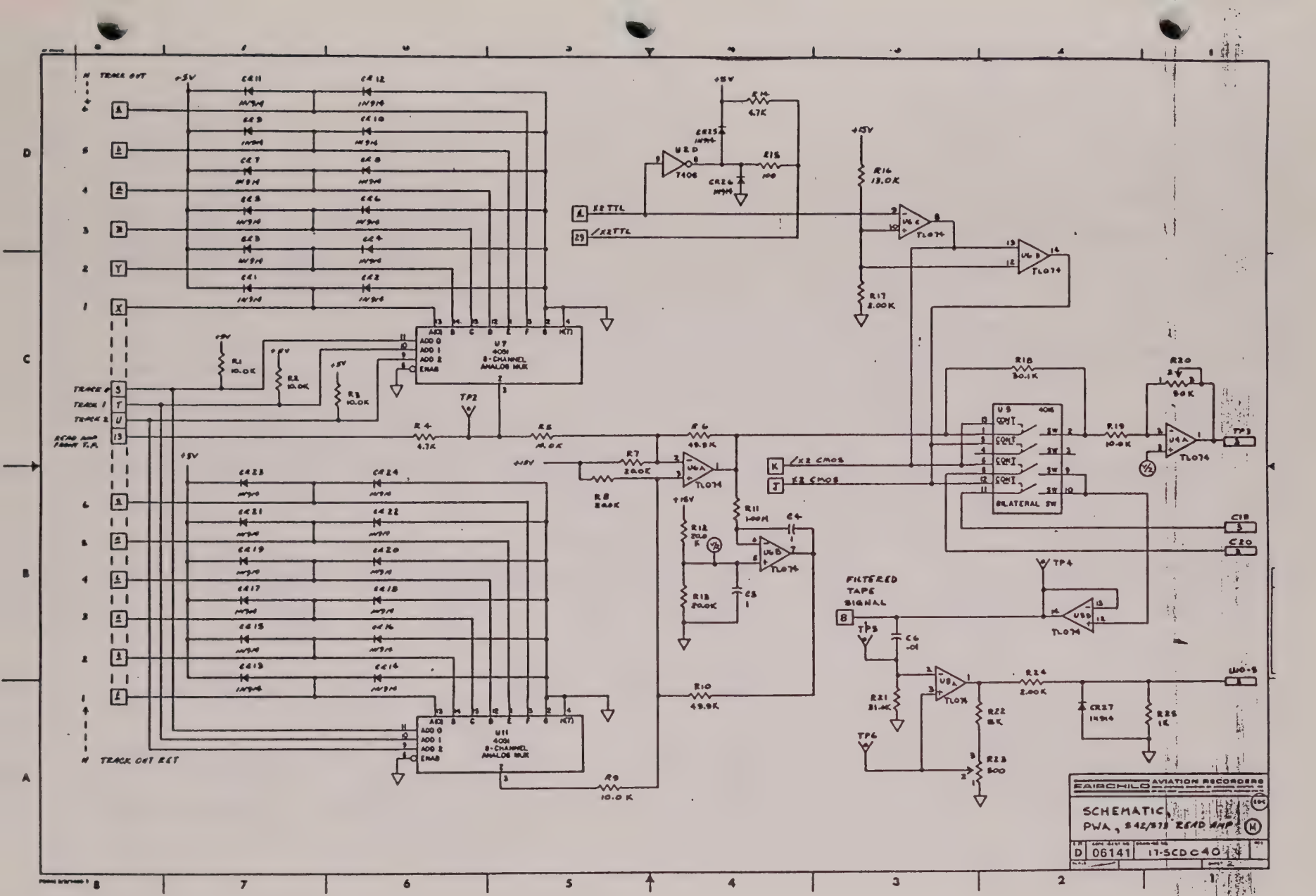
TRACK OUT
TRACK OUT RET
TRACK 0
TRACK 1
TRACK 2
READ AMP FRONT T.P.
U7
4051
8-CHANNEL
ANALOG MUX
U11
4051
8-CHANNEL
ANALOG MUX
U2D
7406
X2 TTL
/X2 TTL
/X2 CMOS
X2 CMOS
U5
4016
BILATERAL SW
FILTERED
TAPE
SIGNAL
FAIRCHILD AVIATION RECORDERS
SCHEMATIC,
PWA, S42/373 READ AMP
D
06141
17-SCD040

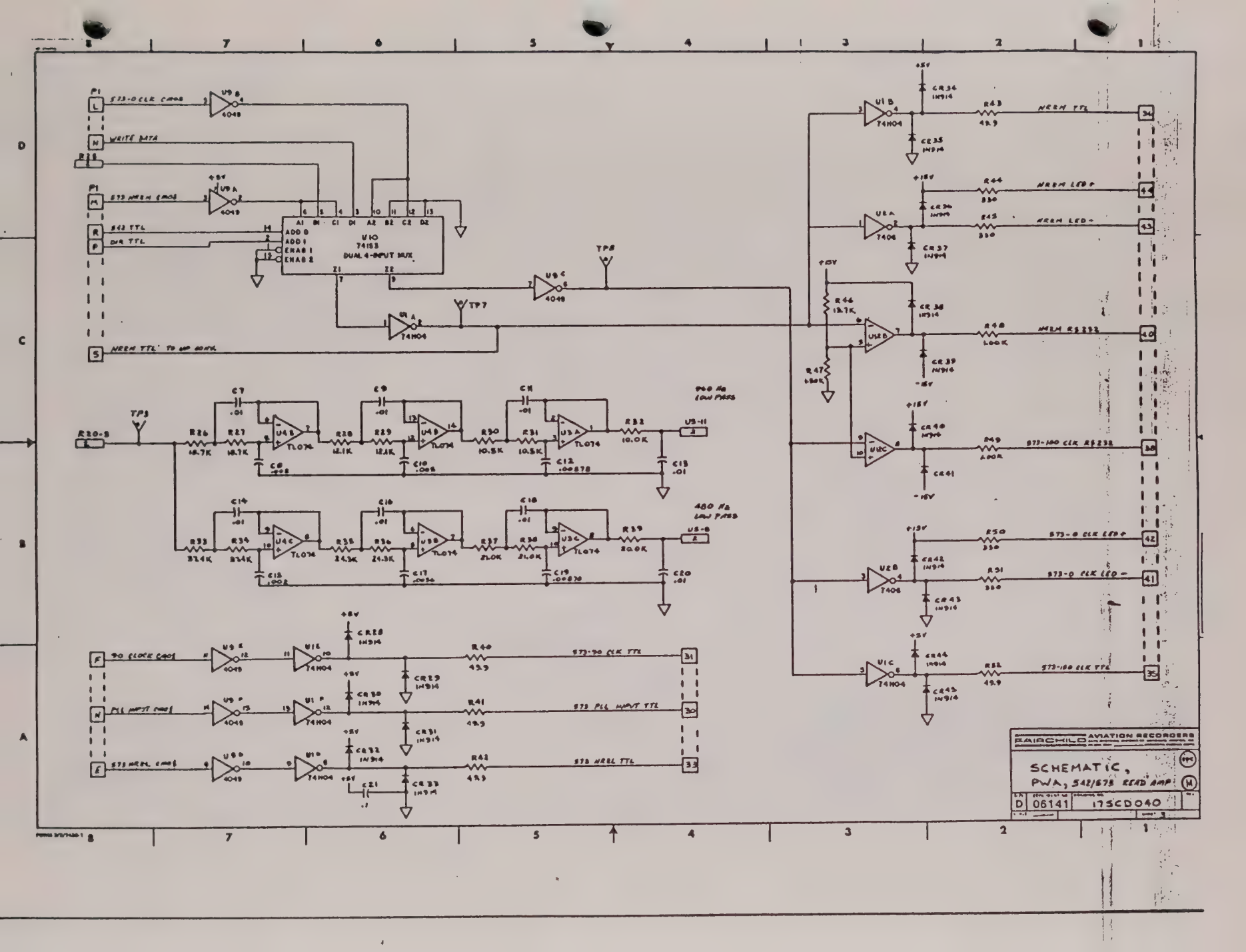

U10
74153
DUAL 4-INPUT MUX
ADD 0
ADD 1
ENAB 1
ENAB 2
WRITE DATA
NRZM TTL TO UP CONV.
960 Hz LOW PASS
480 Hz LOW PASS
NRZM TTL
NRZM LED +
NRZM LED -
NRZM RS232
573-100 CLK RS232
573-0 CLK LED +
573-0 CLK LED -
573-100 CLK TTL
90 CLOCK CMOS
PLL INPUT CMOS
573 NRZL CMOS
573-90 CLK TTL
573 PLL INPUT TTL
573 NRZL TTL
FAIRCHILD AVIATION RECORDERS
SCHEMATIC,
PWA, 542/573 READ AMP
D
06141
17SCD040

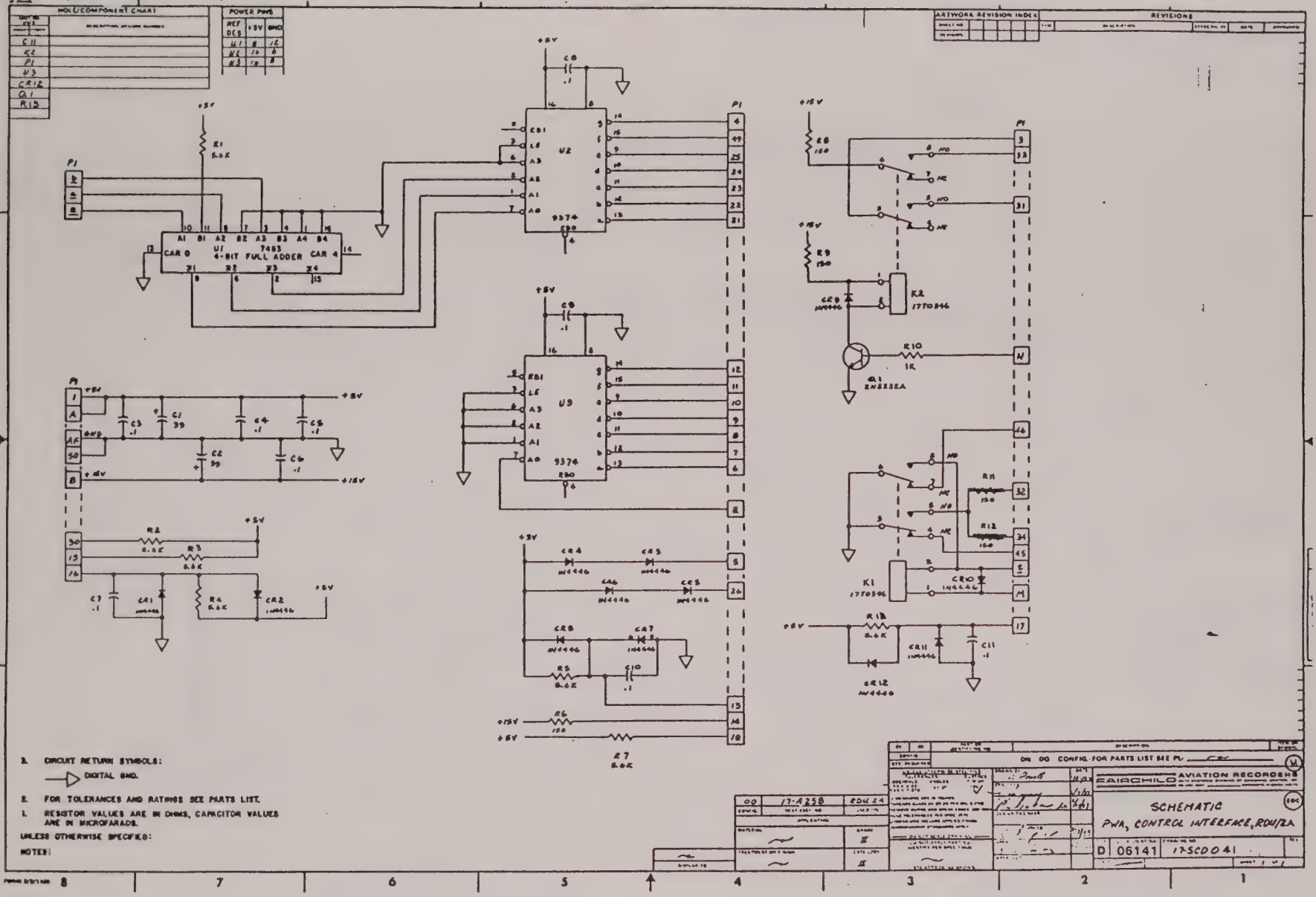
HOLE/COMPONENT CHART
POWER PINS
ARTWORK REVISION INDEX
REVISIONS
U1 7483 4-BIT FULL ADDER
U2 9374
U3 9374
K1 17T0346
K2 17T0346
Q1 2N2222A
3. CIRCUIT RETURN SYMBOLS:
DIGITAL GND.
2. FOR TOLERANCES AND RATINGS SEE PARTS LIST.
1. RESISTOR VALUES ARE IN OHMS, CAPACITOR VALUES ARE IN MICROFARADS.
UNLESS OTHERWISE SPECIFIED:
NOTES:
ON 00 CONFIG. FOR PARTS LIST SEE PL
FAIRCHILD AVIATION RECORDERS
SCHEMATIC
PWA, CONTROL INTERFACE, RDU/2A
D 06141 17-SCD041
17-A258 RDU 24

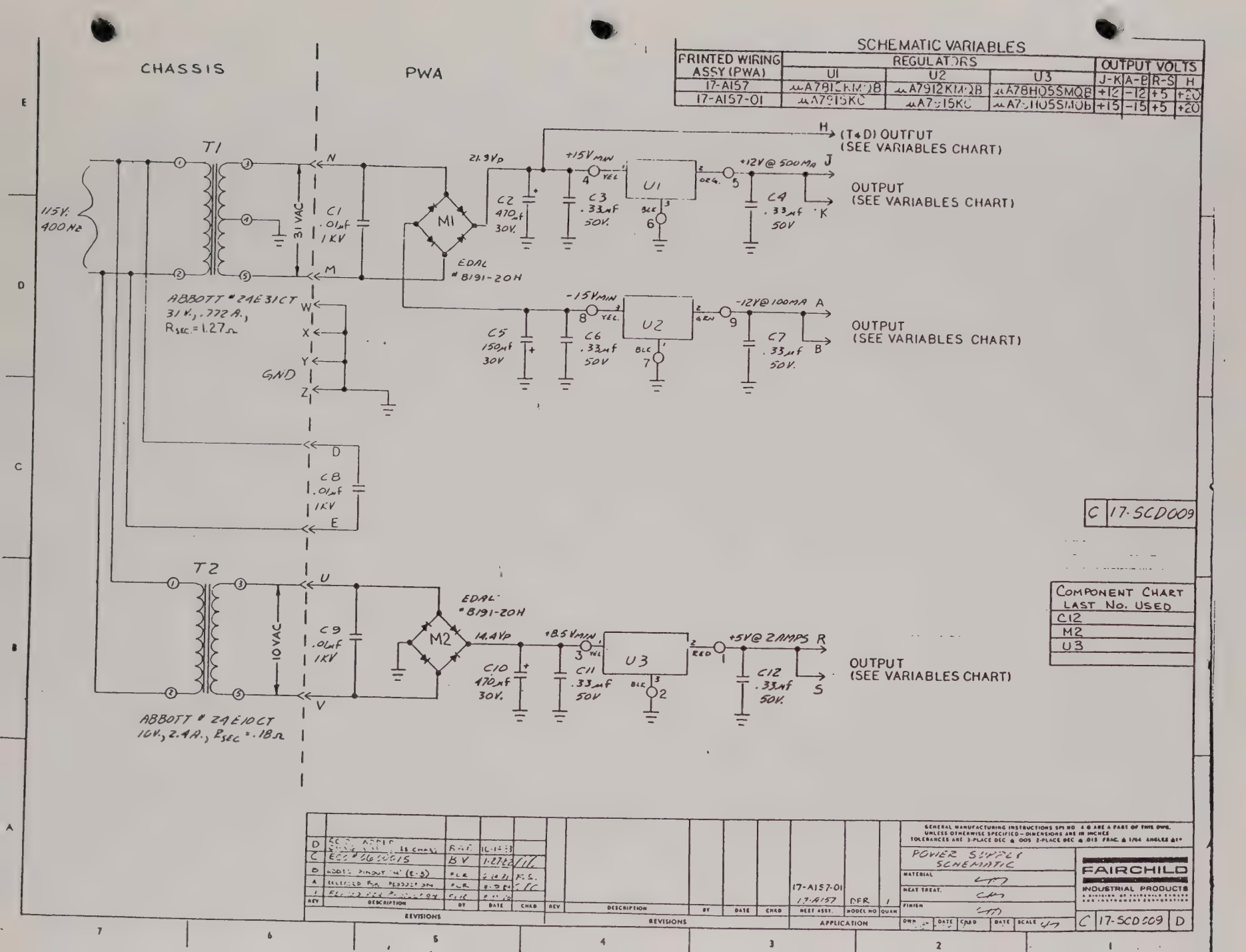

SCHEMATIC VARIABLES

PRINTED WIRING ASSY (PWA)	REGULATORS U1	U2	U3	OUTPUT VOLTS J-K	A-B	R-S	H
17-A157	µA7812KMQB	µA7912KMQB	µA78H05SMQB	+12	-12	+5	+20
17-A157-01	µA7915KC	µA7915KC	µA78H05SMQB	+15	-15	+5	+20

C 17-SCD009

COMPONENT CHART LAST No. USED
C12
M2
U3

REV	DESCRIPTION	BY	DATE	CHKD
D	[illegible]	[illegible]	10-14-83	
C	ECO #[illegible]	BV	1-27-82	[illegible]
B	ADDED PINOUT "H" (E-3)	FLR	[illegible]	F.S.
A	[illegible]	FLR	[illegible]	[illegible]
1	[illegible]	[illegible]	[illegible]	

REVISIONS

REV	DESCRIPTION	BY	DATE	CHKD

REVISIONS

NEXT ASSY.	MODEL NO	QUAN
17-A157-01	DFR	1
17-A157		

APPLICATION

GENERAL MANUFACTURING INSTRUCTIONS SPI NO 4 G ARE A PART OF THIS DWG. UNLESS OTHERWISE SPECIFIED – DIMENSIONS ARE IN INCHES TOLERANCES ARE 3-PLACE DEC ± .005 2-PLACE DEC ± .015 FRAC. ± 1/64 ANGLES ±1°

POWER SUPPLY SCHEMATIC

MATERIAL

HEAT TREAT.

FINISH

DWN | DATE | CHKD | DATE | SCALE

FAIRCHILD INDUSTRIAL PRODUCTS

C 17-SCD009 D

SECTION 6

PROGRAM NAME: AUTO BOOT
PROGRAM NO.: 17P300 (Pneumatic)
TAPE NO.: 17TE421 (Pneumatic)

DESCRIPTION

This program provides the capability to access any of the programs recorded on PDDU tapes. It resides at the beginning of each tape (BOT) and is recorded on each side (Tracks A & B). This technique eliminates incorrect cassette installation, while providing a more efficient means to access the tape beginning and getting started.

When loaded and executed, the BOOT program outputs a directory which lists all programs on tape. Through menus and sub-menus the operator then selects the desired program which will be loaded automatically.

OPERATION

1. Apply power and initialize if necessary (Refer to HX-20 operation). One of the following menus will be displayed:

   A. CTRL/@ INITIALIZE
      1 MONITOR
      2 BASIC

   B. CTRL/@ INITIALIZE
      1 MONITOR
      2 BASIC
      3 RD 542P

MENU A will be displayed following the initialization procedure mentioned above, or if an unprotected program resides in memory. All PDDU programs supplied are designed to be protected when run. This will prevent an inadvertent erasure by loading another program over it.

MENU B (in this example), indicates that the PDDU Program #17P301 is in memory. Should an attempt to load another program be made, a "PP error" (protect violation) will occur and the "load" will be inhibited. The protection must first be removed to allow another program to be loaded (Section 2, Display B).

2. In either case, the Basic interpreter must be accessed before any commands are recognized. This is accomplished by selecting a "2" from the applicable menu by entering the number 2 from the keyboard.

   One of the following displays will now appear on the LCD screen:

   A.
   ```
   COPYRIGHT 1982 BY
   MICROSOFT & EPSON
   P1:        Ø BYTES
   >
   ```

   B.
   ```
   COPYRIGHT 1982 BY
   MICROSOFT & EPSON
   P1:RD 542P  9212 BYT
   >
   ```

DISPLAY A will appear if the HX-20 has been initialized in Step 1. This display indicates that memory partition P1 is clear (Ø bytes). Proceed to Step 3.

DISPLAY B will appear if the HX-20 has not been initialized and a program resides in memory. In this instance, the RD542P program (as mentioned in Step 1) must have the protection removed. To do this, input TITLE followed by a pair of double quotes, TITLE"". Terminate the input with a <CR>.

Refer to the following example:

```
COPYRIGHT 1982 BY
MICROSOFT & EPSON
P1:RD 542P  9212 Byt
TITLE""-
```

3. The tape cassette must now be rewound to the beginning of tape (BOT). With the tape cassette placed in the tape drive so the left hand (take up) reel has the lesser amount tape, (lower rewind time), input the wind command by typing WIND followed by a carriage return <CR>.

   The cassette will immediately rewind to the BOT. Since a number wasn't included in the above WIND instruction, the HX-20 defaulted to zero, which in effect is the same as rewinding the tape.

SECTION 6

When the command has been completed, a prompt > will appear as in the following display:-

```
P1:RD 542P  9212 Byt
TITLE""
WIND
>
```

4. The BOOT program may now be loaded into memory. The operator inputs the command, LOAD <CR> from the keyboard. The tape drive will immediately respond by going into the drive playback mode, search the tape and read into memory the first program that is found. When the BOOT is found, a message will be output. When the entire program has been entered into memory, the prompt will re-appear. Typical display follows:

```
LOAD
SEARCHING
FOUND: BOOT V1
>
```

5. The operator now executes the BOOT program by either typing in RUN <CR> from the keyboard or depressing the function key PF5. The following displays will be output:-

```
PROGRAMS ON TAPE
(17-TE421)
```

This display identifies the tape being read as #17-TE421. This identifies the tape which contains the pneumatic programs. After a slight delay the primary menu will now be output.

```
1.  READ 542P
2.  DECOM
3.  DFR TEST
SELECT ONE
```

SECTION 6

6. This menu offers the operator the choice of program to load by displaying a directory of the functional programs that are on tape.

   a. If (1) is selected, the RD542P will be loaded. Proceed to Step 7.

   b. If (2) is selected, a sub-menu of DECOM programs will be output. Proceed to Step 8.

   c. If (3) is selected, the DFR Test programs will be loaded. Proceed to Step 9.

7. Select Option 1 by entering a "1" from the keyboard. The HX-20 will now activate the tape drive in the fast forward mode, to the point where the RD542P program resides and begin loading the selected program.

   The operator is kept informed during the access and loading interval by display which then outputs the program name (RD542P) as well as the revision level (.Vn).

```
LOADING BASIC
   PROGRAM
RD 542P .V1
```

   Proceed to Step 10.

8. Select Option 2 by entering a "2" from the keyboard. A sub-menu which lists the DECOM programs available will now be output:

```
DECOM PGMS AVAILABLE
  1. DECOM 542
  2. DECOM 573
SELECT ONE
```

   a) If a (1) is selected, the DECOM 42 program will be loaded. This is marked by the output of the following display:-

```
LOADING BASIC
   PROGRAM
DECOM 42 .V1
```

SECTION 6

The HX-20 will now activate the tape drive in the fast forward mode until it reaches the point on tape where the selected program is found. At that point, the load commences. Proceed to Step 10.

b. If a (2) is selected an additional sub-menu will now be output as follows:-

DATA FMT TO BE DECOM
1. ARINC 573
2. ARINC 717
SELECT ONE

Since the DECOM 73 program supports both ARINC 572 and ARINC 717 formats, the operator must select the data format to be encountered. Dependent upon this choice, a flag will set in memory which will be accessed by the DECOM 73 program which will allow it to accommodate the chosen format.

1) If a (1) is selected, the following display will be output:

LOADING BASIC
PROGRAM
DECOM 73 .V1
FOR ARINC 573 FMT

Proceed to Step 10.

2) If a (2) is selected, the following display will be output:

LOADING BASIC
PROGRAM
DECOM 73 .V1
FOR ARINC 717 FMT

Proceed to Step 10.

9. Select Option 3 by entering a "3" from the keyboard. The HX-20 will now activate the tape drive in the fast forward mode, to the point where the DFR Test programs are found. Once found, the load will begin.

SECTION 6

The operator is kept informaed during the access and loading interval by the display which is output. The program name DFR Test as well as the revision level (.Vn) is output.

LOADING BASIC
PROGRAM
DFR TEST

10. When the "program load" has been completed the prompt $\geq$ will reappear at the left-hand side of the display signifying that BASIC will now accept commands once again. The operator need now only type in RUN <CR> or depress PF5 to cause the loaded program to be executed.

SECTION 7

PROGRAM NAME: ARINC RD542P
PROGRAM NO.: 17P301
TAPE NO.: 27TE421

DESCRIPTION

This program accepts data in ARINC 542 format from pneumatic aircraft and outputs the recorded flight parameters in engineering units. All data to be displayed is controlled from a parameter list as defined by the operator. A built-in self-test feature in which program-generated data are used may be optionally selected to ensure proper unit operation. An external RS-232 serial port may be program activated to provide an external hard copy of all parameters.

OPERATION

1. TURN POWER SWITCH ON

   Menu will appear on LCD screen.

   (NOTE: ALL OPERATOR INPUTS ARE UNDERLINED.)

   CTRL/@ INITIALIZE
   1 MONITOR
   2 BASIC
   3 RD 542P

   (NOTE: IF PROGRAM DOES NOT APPEAR AT NO. 3, PROCEED TO AUTO BOOT PROGRAM NO. 17P300, TAPE NO. 17TE421, SECTION #6.)

   OPERATOR IS QUE'D FOR INPUT

   a. Accesses Monitor (Machine Language Function)
   b. Accesses Basic Interpreter
   c. Runs resident RD 542 Pneumatic Program

2. DEPRESS '3' (To select RD 542P Program)

   COPYRIGHT 1982 BY
   MICROSOFT & EPSON
   P1:RD 542P 9212 Byt
   >

SECTION 7

Screen will display manufacturers copyright msg.; also P1: RD 542P 9212 Bytes informs operator that the RD 542P program resides in program area #1 (There are 5 memory partitions - Hence 5 programs can be resident simultaneously) and it occupies 9212 Bytes of Memory.

* This display is momentary and will process to next output

02/25/83
08:26:19

—

Time & Date will be displayed on screen if microprinter power switch is "ON". Screen contents will be copied to microprinter.

FAIRCHILD
AVIATION RECORDERS

—

Next display is accompanied by audio tone (little horn blowing here). Display will remain for ≈2.5 seconds (longer if microprinter is ON).

The following message is output to the microprinter (only if on) to complete the historical record should the operator desire a hard copy.

AIRCRAFT # _____
TYPE _____

The following message is output to the LCD screen and copies to the microprinter (if ON). It indicates the ARINC mode of operation.

ARINC
542 PNEUMATIC

Next display RQ input from operator.

(NOTE: NOT OUTPUT TO MICROPRINTER)

OPTIONS:

Y - Selftest Data used by program is generated by program itself.

N - No Selftest - Data is supplied by external bit stream-accessed by real time program.

* If a selection of NOT made - Auto default to real time program ≈ 5 seconds.

3. SELECT Y

RESULT:

TEST DATA PARAMETERS
DATA INCREMENT =4
DO YOU WISH ANOTHER?
(Y,N) _

Additional input from operator required to define selftest operating parameters.

OPTIONS:

Y = Any input (From range to be specified)
N = Programmed increment of 4 Data counts.
(4 counts is smallest increment in order to generate reasonable output displays in engineering units.)

* No Default - Selection must be made Y or N are only inputs accepted.

4. SELECT Y

RESULT:

WHAT INCREMENT?
RANGE=0 to 4095
? _

Additional input from operator required to define selftest data increment. Zero is legitimate input as this represents minimum parameter value which will not change.

4095 is maximum (12-Bit Data Value) - Increments of 4095 will result in full scale values being repeated.

* No Default - Selection (Numeric) must be made followed by <CR>: Anything else would result in redo? Output by BASIC.

Interpreter requesting another input. For example - IF an 'F' is entered.

RESULT:

RANGE=Ø to 4095
?F
?REDO
?_

SECTION 7

5. ENTER 5000<CR>
   RESULT:

ERROR
INCREMENT TOO HIGH
RANGE Ø to 4095

Error message output which is explanatory, supplemented by Parisian Police Siren.

After error msg. timeout, program will take you back to Step 4.

Two consecutive Y entries will get you back here.

6. Enter legitimate increment
   ENTER 10<CR>
   RESULT:

INITIAL DATA VALUE=Ø
DO YOU WISH ANOTHER?
(Y,N)

OPTIONS:
   Y = ANY, FROM RANGE TO BE SPECIFIED
   N = DEFAULT VALUE OF Ø
If Y entered proceed to 7
If N entered proceed to 8

7. ENTER Y
   RESULT:

WHAT INITIAL VALUE?
?_

Program requires Data Base Reference (any value from 0 to Maximum value of 4095 is accepted). Proceed to 8.

SECTION 7

8. ENTER 4096<CR>

RESULT:

ERROR
INITIAL VAL TOO HIGH
RANGE Ø TO 4Ø95

Another error msg. with accompanying wail. After delay it will return to 6.

9. If legitimate # entered in 7 or N (accepting default of Ø) in Step 6.

RESULT:

DO YOU WISH TO
SELECT PARAMETERS
FOR OUTPUT
(Y=YES, N=ALL)

Program RQ's information to set-up output data list.

Since Microprinter or LCD screen can only handle 3 Parameters/Line at a time, the operator can set up a list so only desired parameters are output thereby speeding up the process.

*AUTOMATIC DEFAULT OF N (ALL PARAMETERS) OCCURS IN ≈5 SECONDS IN EVENT QUERY IS NOT RESPONDED TO. THIS ENSURES THAT ONCE PROGRAM IS INITIATED - NO FURTHER INPUT IS REQUIRED TO OUTPUT DATA. REAL TIME DATA WILL BE OUTPUT ON LCD SCREEN OR MICROPRINTER (IF ON) THROUGH DEFAULTS IMBEDDED WITHIN THE PROGRAM.

If Y is selected - (Operator to determine parameter output list, go to 10)
If N is selected - (All parameters in Data Stream to be output, go to 12)

10. RESULT:

TIME (Y, N) ? -

SECTION 7

Operator is queried on whether the first parameter "TIME" is to be output.

A (Y) is the only affirmative response accepted.
An (N) is the accepted negative response.

*HOWEVER ALL RESPONSES MUST BE FOLLOWED BY A <CR> . IN ORDER TO EXPEDITE THE GENERATION OF THE LIST, A <CR> IS ACCEPTED AS A DEFAULT FOR AN (N) ENTRY.

ENTER A <CR>

RESULT:

TIME (Y, N) ?
ALT C (Y, N) ? -

The next query is output. This will continue, taking the operator through the entire list. The screen will scroll upward always displaying the last 4 lines.

ENTER <CR> for all entires.

RESULT:

ERROR
NO PARAMETERS HAVE
BEEN SELECTED
FOR OUTPUT

An error msg. will be output with suitable accompanying alarm. The program, after a suitable time delay for msg. consumption will return to Step 9.

Quickly enter a Y to inhibit the auto default - the program will return you to Step 10 once again.

SECTION 7

11. Select Time, Altitude (Fine) and Airspeed by entering a Y<CR> after the respective queries when they appear.

```
TIME (Y,N) ? Y
ALT C (Y, N) ?
ALT F (Y, N) ? Y
AIRSPEED (Y, N) ? Y -
VERT ACC1 (Y, N) ?
BINARY WD (Y, N) ?
HEADING   (Y, N) ?
VERT ACC2 (Y, N) ? -
```

12. This last operator defined input is then requested.

```
DO YOU WISH
  HARDCOPY
(EXTERNAL PRINTER)
(Y, N) ?
```

This input determines whether output is to be over the RS-232 channel to an external printer.

*THERE IS AN AUTO DEFAULT HERE IF AN INPUT IS NOT MADE WITHIN 5 SECONDS. A DEFAULT TO N IS TAKEN BY THE PROGRAM.

IF Y IS INPUT THE OPERATOR IS QUERIED AS TO THE TYPE OF PRINTER SUPPORTED BY THE PROGRAM. GO TO STEP 13; IF N GO TO STEP 15.

13. ENTER Y

RESULT:

```
RS-232 PROTOCOL:
1=EPSON MX-80
2=TI SILENT 700
SELECT 1 OR 2? -
```

OPTIONS: AS INDICATED BY MESSAGE. AS RESULT OF EITHER 1 OR 2 SELECTED. THE ACTUAL PROTOCOL UTILIZED BY THE PROGRAM FOR THE PRINTER SELECTED IS THEN OUTPUT TO ENSURE COMPATIBILITY.

SECTION 7

14. SELECT 1 <CR>

BAUD RATE 4800
WD LENGTH 8BITS
PARITY NONE
STOP BITS 2

SELECT 2 <CR>

BAUD RATE 300
WD LENGTH 8BITS
PARITY NONE
STOP BITS 2

In either case whichever is selected - the following message will appear on the LCD screen and all further output will be across the RS-232 interface. This msg. is output to inform the operator what is taking place.

In the event the printer is 'OFF LINE' or the interface is not active, the program will 'HANG'. This msg will aid the operator and inform him that the interface is not active in the event it does 'HANG'.

OUTPUT ENABLED
TO
EXTERNAL PRINTER

15. Selected data is now converted to engineering units and output. If hard copy had been requested, it is output along with Date/Time. Parameter names and engineering unit I.D. are output once every 50 lines.

If hardcopy had not been requested and the microprinter was on, the output would be:

```
* TIM     Ø ALF 89222
 AIR    Ø.Ø
* TIM   1ØØ ALF 87984
 AIR   22.3
* TIM   2ØØ ALF 86177
 AIR   35.3
```

The asterisk used in this display is to indicate a new frame of data. It always prefixes the first selected data word in every frame.

SECTION 7

16. At the end of each frame, the keyboard is scanned for possible entries. Accepted entries along with definitions of same are:

KEY	FUNCTIONS
R	Return to program start to begin again - redefine parameters.
E	Output to external printer over RS-232 port. If hardcopy had previously been selected, the program will not request printer selection or display protocol in use.
H	Causes the output of a help file, which contains definitions of all abbreviations used in the data displays.
Space Bar	To terminate hard copy in case it had been in effect. Output will return to microprinter (if on) and LCD screen. ENTERING AN E as in above case will resume hardcopy output.

When in doubt or trouble exists -

PRESS MENU and select 3 to restart program or Break, then PF5.

This will cause the program to be run from its start once again.

17. A typical real-time display of all flight parameters augmented by the output of the help file is listed below:

```
* TIM   30 ALC   -138
 ALF  -138 AIR    Ø.Ø
 HDG 27Ø.Ø VA1  +Ø.92
 VA2 +Ø.92 B1Ø1ØØØØØ
* TIM   4Ø ALC   -138
 ALF  -138 AIR    Ø.Ø
 HDG 27Ø.Ø VA1  +Ø.92
 VA2 +Ø.92 B1Ø1ØØØØØ

 TIM=TIME/SECONDS
 ALC=ALTITUDE COARSE/FEET
 ALF=ALTITUDE FINE/FEET
 AIR=AIRSPEED/KNOTS
 HDG=HEADING/DEGREES
 VA1=VERT ACC(1st .5SEC)/G's
```

SECTION 7

17. Cont'd

```
VA2=VERT ACC(2nd .5SEC)/G's

B=BINARY DATA/BDMFTSPE

* TIM   7Ø ALC   -167
 ALF  -167 AIR    Ø.Ø
 HDG 27Ø.Ø VA1  +Ø.92
 VA2 +Ø.92  B1Ø1ØØØØØ
```

All entires in the help file are self-explanatory with the exception of the binary word. The individual discrete bits are defined as follows:

(Refer also to FAR #32 -'ARINC 542 Format')

B - Binary 2/Marker Beacon (Ø = on)

D - Trip/Date (slow code)

M - Microphone (Ø = on)

F - Fault (1 = fault condition)

T - Test (1 = track change in progress)

S - CPU Status (1 = fault condition)

P - Phase (alternates I/O with track change)

E - Mode (1 = Electric, ¢ = Pneumatic)

18. Typical hardcopy output (external printer via RS-232 channel) contains all flight parameters regardless of the operator defined parameter list. A sample output of simulated flight data follows:-

SECTION 7

18. Continued

08/08/83

10:22:07

TIME SECS	ALT-E FEET	AIRSP KNOTS	HEAD DEG	VACC1 G/S	VACC2 G/S	BINARY BDMFTPSE
3000	10313	133.8	22.5	+0.62	+0.62	00100010
3100	10326	135.3	23.5	+1.38	+1.38	01110010
3200	10340	136.7	24.5	+0.58	+0.58	00001010
3300	10354	138.2	25.5	+0.58	+0.58	01001010
3400	10368	139.7	26.5	+1.42	+1.42	00111010
3500	10382	141.2	27.5	+1.42	+1.42	01111010
3600	10396	142.8	28.5	+0.54	+0.54	00001010
3700	10410	144.3	29.5	+1.46	+1.46	01011010

SECTION 8

PROGRAM NAME: DECOM 42

PROGRAM NO. : 17P302

TAPE NO. : 17TE421, 17TE422

Description:

DECOM 42 accepts either pneumatic or electric data in ARINC 542 format. The program synchronizes to the input serial data stream, performs frame synchronization and then completes the decommutation function by displaying the selected raw data in one of three following forms:

1. Decimal (D)
2. Octal (O)
3. Binary (B)

Operation:

1. DECOM 42 may be entered in one of two ways. The first method is through the Boot program in which sequence the program is first loaded and then RUN. The second method is accessed through the following menu which is output at power-up or through activation of the menu key.

```
CTRL/@ Initialize
1 Monitor
2 Basic
3 Decom 42
```

PDDU programs are designed with inherent protection. Once they have been run, the program title will appear as a line item on subsequent menu displays. In this manner, they can be readily accessed by entering a 3 from the keyboard.

2. Enter 3. The following display will be output on the LCD screen and copied to the microprinter (if on).

```
08/09/83
11:41:15
-

FAIRCHILD
AVIATION RECORDERS
```

If the microprinter is on, an aircraft "I.D." entry is also output. This can be filled in later by the operator to complete the historical record.

```
AIRCRAFT #_____
Type_____
```

(Not output to LCD Screen)

The following display which identifies the program function is then output to the screen and copied to the microprinter.

```
ARINC 542
RAW    DATA
```

3. At this point, the program looks to the operator for information as to content of the data displays, as well as the format in which the data is to be displayed.

```
DATA TO BE DISPLAYED
SELECT DATA BY WD #
(X, X, X Ø = ALL WDS)
```

The operator has the option of selecting a single parameter for display or as many as all of them. This capability enhances the display update rate. Parameters are continually output to the LCD screen until a full screen is accumulated and then are copied to the microprinter. As new data values are then output to the screen, the older ones are scrolled

(disappear) until an entire screen of new data is once again accumulated; at which time they are copied to the microprinter. As the microprinter slows up the data acquisition process, only those parameters desired should be programmed for display.

4. The operator need only enter the word or word numbers in sequence. Multiple word numbers are entered in a string separated by commas. Input is terminated with a <CR>.

```
DATA TO BE DISPLAYED
SELECT DATA BY WD#
(X, X,X   Ø=ALL WDS)
1,2,4,7-
```

In the above example words 1, 2, 4 and 7 have been selected for conversion and display. Word numbers refer to the parameter position in the data frame:

e.g. Word 1 - Sync I.D.
Word 2 - Altitude Coarse
Word 4 - Airspeed
Word 7 - Time

(Refer to ARINC 542 Frame Format)

DECOM 42 checks all entries. If an illegal entry is made, an error message will be output with accompanying wail (audio). All entires must be numeric in the range of Ø to 9 (Ø = all words).

```
DATA TO BE DISPLAYED
SELECT DATA BY WD#
(X,X,X  Ø=ALL WDS)
12,4,7 -

12,4,7
ILLEGAL ENTRY
INPUT AGAIN
```

In the above example, the comma was not inserted between 1 and 2 and as a result the program assumed words 12, 4 and 7 were selected. As word #12 is non-existent in the ARINC 542 format, the error message was output. Recovery from the error is automatic. The screen is then cleared and the request for data to be displayed is refreshed.

5. Following a legitimate entry in Step 4, the operator is then prompted for the display format desired.

```
DATA DISPLAY FORMAT
B=BIN
D=DEC
O=OCT    SELECT ONE?
```

The operator selects the format by depressing the key specified.

```
B=BINARY
D=DECIMAL
O=OCTAL
```

6. DECOM 42 now acquires data, strips out the words of interest, converts to the desired format and displays the data. As mentioned in Step 3, a full screen of data will be accumulated then copied to the microprinter (if on).

An example of the data specified in Step 4 is listed below in decimal form:

```
Ø 1 265ØD  Ø 2 3768D
Ø 4    ØD  Ø 7  199D
Ø 1 265ØD  Ø 2 3768D
Ø 4    ØD  Ø 7  2ØØD
```

An explanation of the display is as follows: -
The leading zero (Ø) indicates the data frame while the 1, 2, 4 and 7 indicate the word # within that frame. As the ARINC 542 format does not provide for sub-commutation (sub-frames), the frame # (Ø) has no

significance as it is always output as Ø.

The 1 to 4 digit numer is the raw data value of the parameter in decimal. This 'format tag' is appended to the value itself and appears as the suffix 'D'. Decimal data values fall within 0-4095 (maximum data value for a 12-bit word).

7. Data formats can be changed dynamically (while program is running). The operator need only enter a single keystroke while the screen is being updated or while the data is being copied to the microprinter. The next data frame will be output in the updated format.

Keystrokes that are recognized by the program during the data acquisition mode:

B - for display in binary.
O - for display in octal.
D - for display in decimal.
R - for restart. This entry will cause the program to return to Step 4 for a new parameter list definition.

Examples of the previously selected data in other formats are:

Ø 1 1Ø1ØØ1Ø11Ø1ØB
Ø 2 111Ø1Ø111ØØØB
Ø 4 ØØØØØØØØØØØØB
Ø 7 ØØØØ11Ø1ØØ1ØB
Ø 1 1Ø1ØØ1Ø11Ø1ØB
Ø 2 111Ø1Ø111ØØØB
Ø 4 ØØØØØØØØØØØØB
Ø 7 ØØØØ11Ø1Ø1ØØB

It can be seen that the previously defined parameter list is still active, however, all words specified are displayed in binary. (Note: This format results in a slower update rate than when decimal has been specified. This is due to a greater software overhead caused by the added conversion routine.)

Ø 1 5132_O Ø 2 $727Ø_O$
Ø 4 $Ø_O$ Ø 7 325_O
Ø 1 5132_O Ø 2 $727Ø_O$
Ø 4 $Ø_O$ Ø 7 325_O

The above display is output when an 0 has been entered specifying format change to octal.

8. Select All Words (Ø)

DECOM 42 provides an expedient way to generate a parameter list which contains all words within the data frame. In Step 4, instead of entering a word string consisting of word # 1 through 9 separated by commas, the operator need only enter a zero (Ø) as specified.

Sample listing depicting all data words

```
DATA TO BE DISPLAYED
SELECT DATA BY WD#
(X,X,X    0=ALL WDS)
0_

0 1 2650D   0 2 3772D
0 3 3772D   0 4    0D
0 5   64D   0 6  133D
0 7  230D   0 8    0D
0 9   64D   0 1 2650D
0 2 3772D   0 3 3772D
0 4    0D   0 5   64D
0 6  133D   0 7  230D
0 8    0D   0 9   64D
0 1 2650D   0 2 3772D
0 3 3772D   0 4    0D
0 5   64D   0 6  133D
0 8 000000000000B
0 9 000001000000B
0 1 101001011010B
0 2 111010111100B
0 3 111010111100B
0 4 000000000000B
0 5 000001000000B
0 6 000010000101B
0 7 000011101010B
0 8 000000000000B
0 9 000001100000B
0 1 101001011010B
0 2 111010111100B
0 3 111010111100B
0 4 000000000000B
0 5 000001000000B



0 1 51320
0 2 72746   0 3 72746
0 4    0o   0 5  1000
0 6  2056   0 7  3670
0 8    0o   0 9  1000
0 1 2650D   0 2 3772D
0 3 3772D   0 4    0D
0 5   64D   0 6  133D
0 7  244D   0 8  1100D
0 9   71D   0 1  2650D
0 2 3772D   0 3  3772D
0 4    0D   0 5   64D
0 6  133D   0 7  2600D
0 8    0D   0 9   960D
0 1 2650D   0 2 3772D
```

SECTION 9

PROGRAM NAME: DFR Functional Test (542P)
PROGRAM NO: 17P303
TAPE NO.: 17P421

Description:

This program verifies the Digital Flight Recorder (DFR) is both functional and operational. The DFR is operated in the ARINC 542 Pneumatic mode. Ten frames of recorded data are input to the PDDU, where the input signal is conditioned and subsequently examined by the program. The data is then evaluated, stored and compared to predetermined limits. If all data is within limits, a "test pass" indication is output accompanied by all first and last data frame parameters in engineering units.

In the event the data, at any time, during the evaluation period (ten frames) exceeds the limits imposed, a 'test fail' indication accompanied by the data parameters failing to meet those limits are output.

Operation:

1. TURN POWER SWITCH ON.
   Menu will appear on LCD screen.
   (NOTE: ALL OPERATOR INPUTS ARE UNDERLINED.)

   CTRL/@ Initialize
   1. MONITOR
   2. BASIC
   3. DFR TEST

   (NOTE: IF PROGRAM DOES NOT APPEAR AT NO. 3, PROCEED TO AUTOBOOT PROGRAM NO. 17P300, TAPE NO. 17TE421.)

   OPERATOR IS QUE'D FOR INPUT
   1. Accesses Monitor (Machine Language Function)
   2. Accesses Basic Interpreter
   3. Runs resident DFR TEST

2. DEPRESS '3' (To select DFR TEST program)

Copyright 1982 by
Microsoft & EPSON

P1:DFR TEST 8976

Screen will display manufacturers copyright msg.; also P1: DFR TEST 8976 Bytes informs operator that the DFR TEST Program resides in program area #1 (There are 5 memory partitions - Hence 5 programs can be resident simultaneously) and it occupies 8976 Bytes of Memory.

* This display is momentary and will process to next output.

3. PROGRAM START-UP

Screen will be cleared with a reminder for the operator to activate the hardcopy device (microprinter) output.

```
TURN ON
MICROPRINTER
_
```

The operator can activate the printer by sliding the Printer switch to the right (ON).

(NOTE: The printer can be left in the off position with the program continuing to run much faster, however, the hardcopy will not be output.)

4.

```
06/20/83
17:08:43
_
```

Time & Date will be displayed on screen documenting the test. Screen contents will then be copied to microprinter.

5.

```
*FAIRCHILD*
AVIATION RECORDERS
_
```

This display is copied to microprinter indicating program start.

6.

```
_
      DIGITAL
FLIGHT RECORDER
ARINC 542P_
```

This next display specifies the DFR operational mode and if the printer is ON, is copied to it.

SECTION 9

7.

DFR
ON BOARD AIRCRAFT
FUNCTIONAL
TEST

This display lists the Program name. This is also copie to the printer.

DFR SER #_____

Track #_____

Aircraft#_____

Type _____

While the previous display is held on the LCD screen, the micro-printer continues to print. The output above is furnished to complete the hardcopy output documenting the D #, the track the test was performed on, and information regarding the aircraft I.D.

8.

PROGRAM PDDU
AS FOLLOWS:-

This next display is held on the screen with accompanying audio tones which are designed to get the operator's attention. It is followed by instructions to the operator to ensure proper PDDU set-up.

9.

573/543 TO 542
TRACK SELECT TO A
READ/WRITE TO READ
HIT CR TO PROCEED -

PDDU Set-up Instructions

SWITCH	SET TO	PURPOSE
573/542	542	Ensures internal bit-sync output is Harvard-B1Ø (542)
Track Select	A	Places selection in Auto. The HX-20 will automatically read track being recorded upon.

SECTION 9

Switch	Set To	Purpose
Read/Write	Read	The HX-20 is reading data from tape.

(NOTE: The program execution is halted here until a <CR> is entered. Pressing the return key will cause the program to proceed.)

10. ACQUIRING DATA

The screen is then cleared and this display that follows indicates the HX-20 is now in the data acquisition routine acquiring the first frame of data.

11. ACTIVATE
MICROPHONE KEY
TRIP/DATE ENCODER
FOR 5 SEC

Prior to the evaluation of the first data frame the operator is now requested to activate both the microphone key and trip/date recorder. If he so chooses these items will be considered in the overall test pass/fail decision. If he chooses to ignore them at this point, the test will continue.

Five seconds are required (minimum) to ensure capture of both status bits recorded on tape.

12. EVALUATING DATE
FRAME 1

The program now evaluates the data taken during the first sample frame and acquires frame #2 data. This action continues with the display updated to indicate what data frame is being considered.

SECTION 9

13.

EVALUATING DATA
FRAME 10

Last display in the 10 frame sequence.

14.

10 DATA FRAMES
EVALUATED
NO ERRORS FOUND

This display is output at this time when all data parameters in the 10 frame sampling are found to be in limits.

If any parameter is found not to be within the limits specified below this display will not be output and the test will fail.

Altitude	<-500 or > 5000 ft any sample.
Airspeed	> 50 KNOTS any sample.
Heading	> 5° BETWEEN samples.
VACC	<0.8G or > 1.2G any sample.
FAULT	If set any sample
CPU STATUS	If set any sample

15.

MIC KEY VERIFIED
T/D ENCODER VERIFIED
TEST COMPLETED PASS*

This display is output next and indicates that both binary bits have been verified and test passes since no parameter errors were experienced during the 10 frame sample (see previous display).

16.

```
MIC KEY NOT VERIFIED
T/D NOT  VERIFIED
WANT TO BYPASS
(Y, N) ?
```

In the event the binary bits had not been activated or a failure in the instrumentation system or Flight Recorder caused the proper response not to be recorded during the sample period, the above message is displayed on the LCD screen. (This display is not copied to the printer).

The operator at this point can leave the test site and without additional help activate the required inputs. The program will remain here and continually check both of these discrete bits.

As each bit is monitored and a change is experienced, a message similar to #13 is output. However, both discrete bits have to be found to be working or the program will remain here with a suitable message output informing the operator of the conditions present.

```
T/D ENCODER VERIFIED
MIC KEY NOT VERIFIED
WANT TO BYPASS MIC
(Y, N) ?
```

The operator also can elect the bypass option which will cause the program to bypass verification of either or both these discrete bits and output the Pass/Fail message as in #13.

(NOTE: These bits are not considered in the Pass/Fail decision, however, if verified the appropriate message is output to the printer for the historical record.)

SECTION 9

17.

LOCATION DEPENDENT
PARAMETER CHECK
(ALT REF 29.92 HG)

HEAD (DFR) 30.2°
(COCKPIT)_____

ALT-P (DFR) 335 FT
(COCKPIT)_____

This message is only output to the microprinter. It is intended to provide a means to verify and document the two parameters that are dependent upon the aircraft's position and geographical location. It is output at the end of the tests and allows the operator the opportunity on a post-test basis, to manually enter the aircraft indicated values for these parameters.

18.

SAMPLE DATA OUTPUT

FRAME #1	FRAME #10
TIM 1660	TIM 1720
ALC 335	ALC 335
ALF 335	ALF 335
AIR 0.0	AIR 0.0
HDG 30.2	HDG 30.2
VA1+ 0.87	VA1+ 0.92
VA2+ 0.87	VA2+ 0.92

TEST PERFORMED BY

_____

06/20/83

This display is output to the printer only; the last in the overall sequence of a successful test. It lists the data as taken during the first and last data sampling in engineering units. It is followed by a place for the signature of the test operator and a repeat of the day and time.

SECTION 9

Comparisons of the first and last parameters as well as the overall time will yield the overall data excursions experienced as well as the overall test time.

19.

The tape below indicated an entire test performed with an ultimate Fail decision.

06/21/83
09:37:23
-

MIC KEY VERIFIED
T/D ENCODER VERIFIED
TEST COMPLETED FAIL*

LOCATION DEPENDENT
PARAMETER CHECK
(ALT REF 29.92 HG)
HEAD (DFR) 30.2°
(COCKPIT)_____

ALT-P (DFR) 305 FT
(COCKPIT)_____

SAMPLE DATA OUTPUT
DATA PARAMETERS
OUT OF SPEC

FRAME	DIFF	PARAMETER	
4	104.1	HDG	134.3
4	1.8	VA1	+3.00
4	1.8	VA2	+3.00
5	12.0	HDG	146.3
5	1.8	VA1	+3.00
5	1.8	VA2	+3.00
6	1.8	VA1	+3.00
6	1.8	VA2	+3.00
7	-114.0	HDG	32.3
8	90.0	HDG	122.3
9	-90.0	HDG	32.3

TEST PERFORMED BY

_____

06/21/83
09:40:40

SECTION 9

The data sample output lists all parameters that were found to exceed the specified limits. (Section 12) Each parameter is listed in order with the sample that was found to be bad and the difference or change from the previous sample. The actual value in engineering units is also output.

ALL TRACK TEST

Following the DFR Functional test, the screen is cleared and a menu is output, presenting the operator with two options:

```
PROGRAM OPTIONS:
1.  REPEAT FUNC TEST
2.  ALL TRACK TEST
SELECT ONE
```

He can either repeat the previously run functional test by entering a '1' or proceed to the ALL Track Test by selecting to input a '2'.

This test provides a means to sample recorded data on all tracks. This data is actual flight data and not the actual data presently being recorded on tape.

1.

```
06/21/83
09:52:03

DFR
ON BOARD AIRCRAFT
ALL TRACKS
TEST
```

The date and time is output to the printer along with the name of the program being run. This message is copied to the microprinter for historical purposes.

2.

```
SELECT TRACK TO  BE
      TESTED
(TRACK SEL SW 1-6)
ENTER TRACK #? -
```

The operator is then queried for the track to be tested. He first selects the DFR data to be evaluated by placing the track select switch to the desired track. (NOTE: This selection does not affect the record operation. Recording on tape continues on the track displayed by the Track Display (LED).

The operator also inputs the same track # into the computer by entering the appropriate #. This information will be used for the subsequent report output. If the entry is other than a number (1-6) the display will be refreshed and Step 2 repeated.

3.

```
TRACK # 2

10 DATA FRAMES
  EVALUATED
NO ERRORS FOUND

TRACK # 2     PASS*

SAMPLE DATA OUTPUT

FRAME #1    FRAME #10
 TIM 3390    TIM 3440
 ALC  246    ALC  275
 ALF  246    ALF  275
 AIR  0.0    AIR  0.0
 HDG121.6    HDG121.6
 VA1+0.87    VA1+0.87
 VA2+0.87    VA2+0.87
```

After ten frames are input and evaluated a report on the respective track is output.

The limits the data is compared to is conceivably realistic flight data. These limits are as follows:

SECTION 9

Altitude	-500 to 40,000 feet.
Airspeed	<420 knots.
Heading	<50 degrees (sample-sample).
Vertical Accel	0.4 G to + 1.6G
Fault Indicator or CPU status bit set.	

4.

```
TRACK # 2

TRACK # 2  FAIL*

SAMPLE DATA OUTPUT
DATA PARAMETERS
OUT OF SPEC

FRAME   DIFF    PARAMETER
   3    -0.4    VA1   +0.04
   3    -0.4    VA2   +0.04
   4    -0.4    VA1   +0.04
   4    -0.4    VA2   +0.04
```

If any parameter exceeds the limits listed in Section 3, it is output as shown above, properly tagged with the data sample I.D. in which the parameter was received.

5.

```
SELECT TRACK TO BE
      TESTED
(TRACK SEL SW 1-6)
ENTER TRACK #? -
```

The program returns to the same point as in Section #2, prompting the operator for another track to be read and the testing to be continued. However, if the last track (# 6) was checked, the applicable report will be output and the program will not return here, but rather it is assumed that all tracks have been tested and the program terminates as shown below:

6.

TRACK #6

TRACK #6 FAIL*

SAMPLE DATA OUTPUT
DATA PARAMETERS
OUT OF SPEC

FRAME	DIFF	PARAMETER
1	4.5	VA1 + 6.13
1	4.5	VA2 + 6.13
2	4.5	VA1 + 6.13
2	4.5	VA2 + 6.13
3	4.5	VA1 + 6.13
3	4.5	VA2 + 6.13
4	4.5	VA1 + 6.13
4	4.5	VA2 + 6.13
5	4.5	VA1 + 6.13
5	4.5	VA2 + 6.13
6	4.5	VA1 + 6.13
6	4.5	VA2 + 6.13
7	4.5	VA1 + 6.13
7	4.5	VA2 + 6.13
8	4.5	VA1 + 6.13
8	4.5	VA2 + 6.13
9	4.5	VA1 + 6.13
9	4.5	VA2 + 6.13
10	4.5	VA1 + 6.13
10	4.5	VA2 + 6.13

TEST PERFORMED BY

_____

06/21/83
11:45:38

The report is output with the test operator's signature request along with the date and time the test was completed.

SECTION 10

PROGRAM NAME: DECOM 73

PROGRAM NO. : 17P304

TAPE NO. : 17TE421, 17TE422

Description:

DECOM 73 accepts an ARINC 573 data stream in either 573 or 717 formats. This program synchronizes to the input serial data stream which has been "Fairchild GCR" encoded, performs frame and subframe synchronization and then completes the decommutation function by displaying the selected new data in one of the following forms:-

1. Decimal (D)
2. Octal (O)
3. Binary (B)

Operation:

1. DECOM 73 may be entered in one of two ways. The first method is through the Boot program in which sequence the program is first loaded and then RUN. (See Auto Boot program #300 or #350).
The second method is accessed through the following menu which is output at power-up or through activation of the menu key.

```
CTRL/@ Initialize
1 MONITOR
2 BASIC
3 DECOM 73
```

PDDU programs are designed with inherent protection. Once they have been run, the program title will appear as a line item on subsequent menu displays. In this manner, they can be readily accessed by entering a 3 from the keyboard.

SECTION 10

2. Enter 3. The following display will be output on the LCD screen and copied to the microprinter (if on).

```
08/09/83
06:24:51
-

FAIRCHILD
AVIATION RECORDERS
```

If the microprinter is on, an aircraft 'I.D.' entry is also output. This can be filled in later by the operator to complete the historical record.

```
AIRCRAFT #_____
TYPE     _____
```

(Not output to LCD Screen)

One of the following displays which identify the program function is then output to the screen and copied to the microprinter.

A.

```
ARINC 573
RAW   DATA
```

B.

```
ARINC 727
RAW   DATA
```

Note:

The type of ARINC data format has previously been defined during the initial program load by the "Boot" program. This technique eliminates the need to continually define this parameter.

3. At this point, the program looks to the operator for information as to content of the data displays, as well as the format in which the data is to be displayed.

```
DATA TO BE DISPLAYED
SELECT DATA BY WD#
(X,X,X  Ø=ALL WDS)
```

SECTION 10

The operator has the option of selecting:

a) A single parameter from any frame (e.g., 10,1 - Word 10, Frame 1)

b) A single parameter from all frames (e.g., 10, Ø - Word 10, All Frames)

c) All words any frame (e.g., Ø, 1 - All Words, Frame 1)

d) All words, all frames (e.g., Ø, Ø - Words 1 through 64, All Frames)

This capability can enhance the update rate. Parameters are continually output to the LCD screen until full screen is accumulated and then are copied to the microprinter. As new data values are then output to the screen, the older ones are scrolled (disappear) upward until an entire screen of new data is once again accumulated; at which time they are copied to the microprinter. As the microprinter slows up the data acquisition process, only those parameters desired should be programmed for display.

4. The operator need only enter the word and frame numbers in sequence, separated by a comma. Input is terminated with a <CR> .

```
DATA TO BE DISPLAYED
SELECT BY WD,FRAME#
(XX,X      Ø=ALL)
1,Ø -
```

In the above example word 1 from all frames has been selected for display. Word number (1-64) refers to the parameter position in the data frame; while frame number defines the data frame (1-4) in the event it is one which is subcommutated. In the case where it appears in every frame, the frame number would be programmed as Ø to inhibit subcommutation.

(Refer to ARINC 573 Frame Formats).

SECTION 10

DECOM 73 checks all entries. If an illegal entry is made, an error message will be output with accompanying wail (audio). All word entries must be numeric in the range of Ø to 64 (Ø = all words). All frame entries must be numeric in the range of Ø to 4 (Ø = all frames).

```
DATA TO BE DISPLAYED
SELECT BY WD,FRAME#
(XX,X          Ø=ALL)
65,Ø -

65,Ø
ILLEGAL ENTRY
INPUT AGAIN
```

In the above example, word #65, all frames was selected. As word #65 is non-existent in the ARINC format, the error message was output.

Recovery from the error is automatic. The screen is then cleared and the request for data to be displayed is refreshed.

5. Following a legitimate entry in Step 4, the operator is then prompted for the display format desired.

```
DATA DISPLAY FORMAT
B=BIN
D=DEC
O=OCT  SELECT ONE?
```

The operator selects the format by depressing the appropriate key:

B = Binary

D = Decimal

O = Octal

SECTION 10

6. DECOM 73 now acquires data, strips out the words of interest, converts to the desired format and then displays the data. As mentioned in Step 3, a full screen of data is accumulated then copied to the microprinter (if on).

DECOM 73 acquires data as soon as frame synchronization is accomplished; not necessarily beginning with Frame #1. However, a master frame consisting of all (4) data frames is always ingested into internal memory and output in the same sequence. This technique speeds up the acquisition process which requires a minimum of 4 seconds.

The following message is output to inform the operator of the acquisition interval which is then followed by the data.

ARINC 573

ACQUIRING DATA
PLEASE STANDBY..

(Hamilton Standard)

```
F WD DATA (BINARY)
1  1 111000100100
2  1 000111011010
3  1 111000100101
4  1 000111011011
1  1 111000100100
2  1 000111011010
3  1 111000100101
4  1 000111011011
FMT CHANGE - DECIMAL
1  1 3620  2  1  474
3  1 3621  4  1  475
1  1 3620  2  1  474
3  1 3621  4  1  475
FMT CHANGE - OCTAL
1  1 7044  2  1  732
3  1 7045  4  1  733
1  1 7044  2  1  732
3  1 7045  4  1  733
1  1 7044  2  1  732
3  1 7045  4  1  733
```

ARINC 717

ACQUIRING DATA
PLEASE STANDBY..

(Teledyne)

```
F WD DATA (BINARY)
3  1 101001000111
4  1 110110111000
1  1 001001000111
2  1 010110111000
3  1 101001000111
4  1 110110111000
1  1 001001000111
2  1 010110111000
FMT CHANGE - DECIMAL
1  1  583  2  1 1464
3  1 2631  4  1 3512
1  1  583  2  1 1464
3  1 2631  4  1 3512
FMT CHANGE - OCTAL
3  1 5107  4  1 6670
1  1 1107  2  1 2670
```

SECTION 10

All data displays are preceded by a header which defines the frame, word and data format. It can be seen from the above display, synchronization occurred with frame 1 as it is the first data frame output, while, however, the 717 display indicates synchronization occurred with frame 3.

The data output is Fairchild Test Data:

Word 1. Sync I.D.
2. Fixed Heading Data (60°)
3. Fixed Altitude (1000 feet)
4. Fixed Vert Acc (-1G)
5. Fixed Airspeed (150 knots)
6. Time (Seconds X10)

Words 7 through 64 are unique fixed values which define the frame #, ARINC format and position in the data frame (word #).

Data formats can be changed dynamically (while program is running). The operator need only enter a single keystroke while the screen is being updated or while the data is being copied to the microprinter. The next data frame will be output in the updated format.

Keystrokes that are recognized by the program during the data acquisition mode:

B - for display in binary

O - for display in octal

D - for display in decimal

R - for restart. This entry will cause the program to return to Step 4 for a new parameter list definition.

SECTION 10

Examples of the previously selected data in other formats can be seen following the binary portion in the above display.

7. Select all words (Ø,1)

An example of the shorthand method to access all words for a given format is shown below. This example shows the operator requesting all words (1 through 64) from data frame 1 to be displayed.

```
DATA TO BE DISPLAYED
SELECT BY WD,FRAME #
(XX,X          Ø=ALL)
Ø,1-
```

ARINC 573 (Hamilton Standard)

F	WD	DATA	(DECIMAL)		
1	1	3620	1	2	320
1	3	20	1	4	2
1	5	150	1	6	54
1	7	1607	1	8	1608
1	9	1609	1	10	1610
1	11	1611	1	12	1612
1	13	1613	1	14	1614
1	15	1615	1	16	1616
1	17	1617	1	18	1618
1	19	1619	1	20	1620
1	21	1621	1	22	1622
1	23	1623	1	24	1624
1	25	1625	1	26	1626
1	27	1627	1	28	1628
1	29	1629	1	30	1630
1	31	1631	1	32	1632
1	33	1633	1	34	1634
1	35	1635	1	36	1636
1	37	1637	1	38	1638
1	39	1639	1	40	1640
1	41	1641	1	42	1642
1	43	1643	1	44	1644
1	45	1645	1	46	1646
1	47	1647	1	48	1648
1	49	1649	1	50	1650
1	51	1651	1	52	1652
1	53	1653	1	54	1654
1	55	1655	1	56	1656
1	57	1657	1	58	1658
1	59	1659	1	60	1660
1	61	1661	1	62	1662
1	63	1663	1	64	1664

ARINC 717 (Teledyne)

F	WD	DATA	(DECIMAL)		
1	1	583	1	2	320
1	3	20	1	4	2
1	5	150	1	6	54
1	7	1407	1	8	1408
1	9	1409	1	10	1410
1	11	1411	1	12	1412
1	13	1413	1	14	1414
1	15	1415	1	16	1416
1	17	1417	1	18	1418
1	19	1419	1	20	1420
1	21	1421	1	22	1422
1	23	1423	1	24	1424
1	25	1425	1	26	1426
1	27	1427	1	28	1428
1	29	1429	1	30	1430
1	31	1431	1	32	1432
1	33	1433	1	34	1434
1	35	1435	1	36	1436
1	37	1437	1	38	1438
1	39	1439	1	40	1440
1	41	1441	1	42	1442
1	43	1443	1	44	1444
1	45	1445	1	46	1446
1	47	1447	1	48	1448
1	49	1449	1	50	1450
1	51	1451	1	52	1452
1	53	1453	1	54	1454
1	55	1455	1	56	1456
1	57	1457	1	58	1458
1	59	1459	1	60	1460
1	61	1461	1	62	1462
1	63	1463	1	64	1464

SECTION 10

8. Select all words, all frames (Ø,Ø), all words (1 through 64) in all frames (1 through 4) may be accessed and displayed. The person need only input Ø,Ø when asked to define the data to be displayed. An example of the data output in decimal for ARINC 573 is depicted below:

F	WD	DATA	(DECIMAL)		
1	1	3620	1	2	320
1	3	500	1	4	1280
1	5	1500	1	6	5568
1	7	1607	1	8	1608
1	9	1609	1	10	1610
1	11	1611	1	12	1612
1	13	1613	1	14	1614
1	15	1615	1	16	1616
1	17	1617	1	18	1618
1	19	1619	1	20	1620
1	21	1621	1	22	1622
1	23	1623	1	24	1624
1	25	1625	1	26	1626
1	27	1627	1	28	1628
1	29	1629	1	30	1630
1	31	1631	1	32	1632
1	33	1633	1	34	1634
1	35	1635	1	36	1636
1	37	1637	1	38	1638
1	39	1639	1	40	1640
1	41	1641	1	42	1642
1	43	1643	1	44	1644
1	45	1645	1	46	1646
1	47	1647	1	48	1648
1	49	1649	1	50	1650
1	51	1651	1	52	1652
1	53	1653	1	54	1654
1	55	1655	1	56	1656
1	57	1657	1	58	1658
1	59	1659	1	60	1660
1	61	1661	1	62	1662
1	63	1663	1	64	1664

F	WD	DATA	(DECIMAL)		
2	1	474	2	2	320
2	3	500	2	4	1280
2	5	1500	2	6	5568
2	7	2707	2	8	2708
2	9	2709	2	10	2710
2	11	2711	2	12	2712
2	13	2713	2	14	2714
2	15	2715	2	16	2716
2	17	2717	2	18	2718
2	19	2719	2	20	2720
2	21	2721	2	22	2722
2	23	2723	2	24	2724
2	25	2725	2	26	2726
2	27	2727	2	28	2728
2	29	2729	2	30	2730
2	31	2731	2	32	2732
2	33	2733	2	34	2734
2	35	2735	2	36	2736
2	37	2737	2	38	2738
2	39	2739	2	40	2740
2	41	2741	2	42	2742
2	43	2743	2	44	2744
2	45	2745	2	46	2746
2	47	2747	2	48	2748
2	49	2749	2	50	2750
2	51	2751	2	52	2752
2	53	2753	2	54	2754
2	55	2755	2	56	2756
2	57	2757	2	58	2758
2	59	2759	2	60	2760
2	61	2761	2	62	2762
2	63	2763	2	64	2764

F	WD	DATA	(DECIMAL)		
3	1	3621	3	2	320
3	3	500	3	4	1280
3	5	1500	3	6	5568
3	7	3807	3	8	3808
3	9	3809	3	10	3810
3	11	3811	3	12	3812
3	13	3813	3	14	3814
3	15	3815	3	16	3816
3	17	3817	3	18	3818
3	19	3819	3	20	3820
3	21	3821	3	22	3822
3	23	3823	3	24	3824
3	25	3825	3	26	3826
3	27	3827	3	28	3828
3	29	3829	3	30	3830
3	31	3831	3	32	3832
3	33	3833	3	34	3834
3	35	3835	3	36	3836
3	37	3837	3	38	3838
3	39	3839	3	40	3840
3	41	3841	3	42	3842
3	43	3843	3	44	3844
3	45	3845	3	46	3846
3	47	3847	3	48	3848
3	49	3849	3	50	3850
3	51	3851	3	52	3852
3	53	3853	3	54	3854
3	55	3855	3	56	3856
3	57	3857	3	58	3858
3	59	3859	3	60	3860
3	61	3861	3	62	3862
3	63	3863	3	64	3864

F	WD	DATA	(DECIMAL)		
4	1	475	4	2	320
4	3	500	4	4	1280
4	5	1500	4	6	5568
4	7	4007	4	8	4008
4	9	4009	4	10	4010
4	11	4011	4	12	4012
4	13	4013	4	14	4014
4	15	4015	4	16	4016
4	17	4017	4	18	4018
4	19	4019	4	20	4020
4	21	4021	4	22	4022
4	23	4023	4	24	4024
4	25	4025	4	26	4026
4	27	4027	4	28	4028
4	29	4029	4	30	4030
4	31	4031	4	32	4032
4	33	4033	4	34	4034
4	35	4035	4	36	4036
4	37	4037	4	38	4038
4	39	4039	4	40	4040
4	41	4041	4	42	4042
4	43	4043	4	44	4044
4	45	4045	4	46	4046
4	47	4047	4	48	4048
4	49	4049	4	50	4050
4	51	4051	4	52	4052
4	53	4053	4	54	4054
4	55	4055	4	56	4056
4	57	4057	4	58	4058
4	59	4059	4	60	4060
4	61	4061	4	62	4062
4	63	4063	4	64	4064

SECTION 10

A similar display for ARINC 727 data is depicted below:

F	WD	DATA (DECIMAL)			
1	1	583	1	2	320
1	3	20	1	4	
1	5	1500	1	6	5376
1	7	1407	1	8	1408
1	9	1409	1	10	1410
1	11	1411	1	12	1412
1	13	1413	1	14	1414
1	15	1415	1	16	1416
1	17	1417	1	18	1418
1	19	1419	1	20	1420
1	21	1421	1	22	1422
1	23	1423	1	24	1424
1	25	1425	1	26	1426
1	27	1427	1	28	1428
1	29	1429	1	30	1430
1	31	1431	1	32	1432
1	33	1433	1	34	1434
1	35	1435	1	36	1436
1	37	1437	1	38	1438
1	39	1439	1	40	1440
1	41	1441	1	42	1442
1	43	1443	1	44	1444
1	45	1445	1	46	1446
1	47	1447	1	48	1448
1	49	1449	1	50	1450
1	51	1451	1	52	1452
1	53	1453	1	54	1454
1	55	1455	1	56	1456
1	57	1457	1	58	1458
1	59	1459	1	60	1460
1	61	1461	1	62	1462
1	63	1463	1	64	1464

F	WD	DATA (DECIMAL)			
2	1	1464	2	2	320
2	3	20	2	4	
2	5	1500	2	6	5376
2	7	2303	2	8	2304
2	9	2305	2	10	2306
2	11	2307	2	12	2308
2	13	2309	2	14	2310
2	15	2311	2	16	2312
2	17	2313	2	18	2314
2	19	2315	2	20	2316
2	21	2317	2	22	2318
2	23	2319	2	24	2320
2	25	2321	2	26	2322
2	27	2323	2	28	2324
2	29	2325	2	30	2326
2	31	2327	2	32	2328
2	33	2329	2	34	2330
2	35	2331	2	36	2332
2	37	2333	2	38	2334
2	39	2335	2	40	2336
2	41	2337	2	42	2338
2	43	2339	2	44	2340
2	45	2341	2	46	2342
2	47	2343	2	48	2344
2	49	2345	2	50	2346
2	51	2347	2	52	2348
2	53	2349	2	54	2350
2	55	2351	2	56	2352
2	57	2353	2	58	2354
2	59	2355	2	60	2356
2	61	2357	2	62	2358
2	63	2359	2	64	2360

F	WD	DATA (DECIMAL)			
3	1	2631	3	2	320
3	3	20	3	4	
3	5	1500	3	6	5376
3	7	3207	3	8	3208
3	9	3209	3	10	3210
3	11	3211	3	12	3212
3	13	3213	3	14	3214
3	15	3215	3	16	3216
3	17	3217	3	18	3218
3	19	3219	3	20	3220
3	21	3221	3	22	3222
3	23	3223	3	24	3224
3	25	3225	3	26	3226
3	27	3227	3	28	3228
3	29	3229	3	30	3230
3	31	3231	3	32	3232
3	33	3233	3	34	3234
3	35	3235	3	36	3236
3	37	3237	3	38	3238
3	39	3239	3	40	3240
3	41	3241	3	42	3242
3	43	3243	3	44	3244
3	45	3245	3	46	3246
3	47	3247	3	48	3248
3	49	3249	3	50	3250
3	51	3251	3	52	3252
3	53	3253	3	54	3254
3	55	3255	3	56	3256
3	57	3257	3	58	3258
3	59	3259	3	60	3260
3	61	3261	3	62	3262
3	63	3263	3	64	3264

F	WD	DATA (DECIMAL)			
4	1	3512	4	2	320
4	3	20	4	4	
4	5	1500	4	6	5376
4	7	4007	4	8	4008
4	9	4009	4	10	4010
4	11	4011	4	12	4012
4	13	4013	4	14	4014
4	15	4015	4	16	4016
4	17	4017	4	18	4018
4	19	4019	4	20	4020
4	21	4021	4	22	4022
4	23	4023	4	24	4024
4	25	4025	4	26	4026
4	27	4027	4	28	4028
4	29	4029	4	30	4030
4	31	4031	4	32	4032
4	33	4033	4	34	4034
4	35	4035	4	36	4036
4	37	4037	4	38	4038
4	39	4039	4	40	4040
4	41	4041	4	42	4042
4	43	4043	4	44	4044
4	45	4045	4	46	4046
4	47	4047	4	48	4048
4	49	4049	4	50	4050
4	51	4051	4	52	4052
4	53	4053	4	54	4054
4	55	4055	4	56	4056
4	57	4057	4	58	4058
4	59	4059	4	60	4060
4	61	4061	4	62	4062
4	63	4063	4	64	4064

SECTION 11

PROGRAM NAME: Auto-Boot

PROGRAM NO. : 17P350 (Electric)

TAPE NO. : 17TE422 (Electric)

Description:

This program provides the capability to access any of the programs recorded on PDDU tapes. It resides at the beginning of each tape (BOT) and is recorded on each side (Tracks A and B). This technique eliminates incorrect cassette installation, while providing a more efficient means to access the tape beginning and getting started.

When loaded and executed, the Auto Boot program outputs a "directory" which lists all programs on tape. Through menus and sub-menus the operator then selects the desired program which will be loaded automatically.

Operation

1. Apply power and initialize if necessary (refer to HX-20 operation). One of the following menus will be displayed:

A.

```
CTRL/@Initialize
1 MONITOR
2 BASIC
```

B.

```
CTRL/@Initialize
1 MONITOR
2 BASIC
3 RD 542E
```

Menu A will be displayed following the initialization procedure mentioned above, or if an unprotected program resides in memory. All PDDU programs supplied are designed to be protected when run. This will prevent an inadvertent erasure by loading another program over it.

Menu B (in this EXAMPLE), indicates that the PDDU Program #17P351 is in memory. Should an attempt to load another program be made, a "PP Error" (protect violation) will occur and the "load" will be inhibited. The protection must first be removed to allow another program to be loaded (Section 2, Display B).

2. In either case, the Basic interpreter must be accessed before any commands are recognized. This is accomplished by selecting a 2 from the applicable menu by entering the number 2 from the keyboard.

One of the following displays will now appear on the LCD screen.

A.

```
Copyright 1982 by
Microsoft & EPSON
P1:       Ø Bytes
≥
```

B.

```
Copyright 1982 by
Microsoft & EPSON
P1:RD 542E 9153 Byt
≥
```

Display A will appear if the HX-20 has been initialized in Step 1. This display indicates that memory partition P1 is clear (Ø bytes). Proceed to Step 3.

Display B will appear if the HX-20 has not been initialized and a program resides in memory. In this instance, the RD542E program (as mentioned in Step 1) must have the protection removed. To do this, input TITLE followed by a pair of double quotes, TITLE " ". Terminate the input with a <CR>.

SECTION 11

Refer to the following example:

```
Copyright 1982 by
Microsoft & EPSON
P1:RD 542E  9153 Byt
TITLE"" -
```

3. The tape cassette must now be rewound to the beginning of tape (BOT). With the tape cassette placed in the tape drive so the left hand (take up) reel has the lesser amount of tape, (lower rewind time), input the wind command by typing WIND followed by a carriage return <CR>. The cassette will immediately rewind to the BOT. Since a number wasn't included in the above WIND instruction, the HX-20 defaulted to zero, which in effect is the same as rewinding the tape. When the command has been completed, a prompt ≥ will appear as in the following display:

```
P1:RD 542E  9153 Byt
TITLE""
WIND
≥
```

4. The Auto Boot program may now be loaded into memory. The operator inputs the command LOAD <CR> from the keyboard. The tape drive will immediately respond by going into the drive playback mode, search the tape and read into memory the first program that is found. When the Boot is found, a message will be output. When the entire program has been entered into memory, the prompt will reappear. Typical display follows:

```
LOAD
Searching
Found:  BOOT    V1
≥
```

SECTION 11

5. The operator now executes the Boot program by either typing in RUN <CR> from the keyboard or depressing the function key PF5.

The following displays will be output:

PROGRAMS ON TAPE
(17 TE 422)

This display identifies the tape being read as #17TE422, this identifies the tape which contains the electric programs. After a slight delay the primary menu will now be output.

1. READ 542E
2. DECOM
3. DFR TEST
SELECT ONE

6. This menu offers the operator the choice of program to be loaded by displaying a directory of the functional programs that are on tape.

a) If (1) is selected, the RD542E will be loaded. Proceed to Step 7.

b) If (2) is selected, a sub-menu of DECOM programs will be output. Proceed to Step 8.

c) If (3) is selected, the DFR Test programs will be loaded. Proceed to Step 9.

7. Selection Option 1 by entering a 1 from the keyboard. The HX-20 will now activate the tape drive in the fast forward mode, to the point where the RD542E program resides and begin loading the selected program. The operator is kept informed during the access and loading interval by the display which then outputs.

SECTION 11

The program name (RD542E) as well as the revision level (V) is also output.

```
LOADING BASIC
   PROGRAM
RD 542E .V1
```

Proceed to Step 10.

8. Selection Option 2 by entering a 2 from the keyboard. A sub-menu which lists the DECOM programs available will now be output:

```
DECOM PGMS AVAILABLE
   1. DECOM 542
   2. DECOM 573
SELECT ONE
```

a) If a (1) is selected, the DECOM 542 program will be loaded. This is marked by the output of the following display:-

```
LOADING BASIC
   PROGRAM
DECOM  42 .V1
```

The HX-20 will now activate the tape drive in the fast forward mode until it reaches the point on tape where the selected program is found. At that point, the load commences.

Go to Step 10.

b) If a (2) is selected, an additional sub-menu will now be output as follows:-

```
DATA FMT TO BE DECOM
 1. ARINC 573
 2. ARINC 717
SELECT ONE
```

SECTION 11

Since the DECOM 73 program supports both ARINC 573 and 717 formats, the operator must select the data format to be encountered. Dependent upon this choice, a flag will set in memory which will be accessed by the DECOM 573 program which will allow it to accommodate the chosen format.

1) If a (1) is selected, the following display will be output:

```
LOADING BASIC
  PROGRAM
DECOM  73 .V1
FOR ARINC  573  FMT
```

Proceed to Step 10.

2) If a 2 is selected the following display will be output:

```
LOADING BASIC
  PROGRAM
DECOM   73 .V1
FOR ARINC  717  FMT
```

Proceed to Step 10.

9. Selection Option 3 by entering a 3 from the keyboard. The HX-20 will now activate the tape drive in the fast forward mode to the point where the DFR Test programs are found. Once found, the load will begin. The operator is kept informed during the access and loading interval by the display which is output. The program name DFR Test as well as the revision level (.Vn) is output.

```
LOADING BASIC
  PROGRAM

  DFR TEST
```

10. When the "program load" has been completed the prompt ≥ will reappear at the left-hand side of the display signifying that Basic will now accept commands once again. The operator need now only type in RUN <CR> or depress PF5 to cause the loaded program to be executed.

    Refer to the applicable program document for specific details regarding program operation.

SECTION 12

PROGRAM NAME: ARINC RD542E
PROGRAM NO.: 17P351
TAPE NO.: 17TE422

Description:

This program accepts data in ARINC 542 format from electric aircraft and outputs the recorded flight parameters in engineering units. All data to be displayed is controlled from a parameter list defined by the operator. A built-in self-test feature in which program-generated data are used may be optionally selected to ensure proper unit operation. An external RS-232 serial port may be program activated to provide an external hard-copy of all parameters.

OPERATION

1. TURN POWER SWITCH ON

Menu will appear on LCD screen.

(NOTE: ALL OPERATOR INPUTS ARE UNDERLINED.)

CTRL/@ INITIALIZE
1 MONITOR
2 BASIC
3 RD 542E

(NOTE: IF PROGRAM DOES NOT APPEAR AT NO. 3, PROCEED TO AUTO BOOT PROGRAM NO. 17P350, TAPE NO. 17TE422, SECTION #6.)

OPERATOR IS QUE'D FOR INPUT

a. Accesses Monitor (Machine Language Function)
b. Accesses Basic Interpreter
c. Runs resident RD 542E Electric Program

2. DEPRESS '3' (To select RD 542E Program)

COPYRIGHT 1982 BY
MICROSOFT & EPSON
P1:RD 542E 9153 Byt
>

SECTION 12

Screen will display manufacturers copyright msg.; also P1: RD 542E 9153 Bytes informs operator that the RD 542E program resides in program area #1 (There are 5 memory partitions - Hence 5 programs can be resident simultaneously) and it occupies 9153 Bytes of Memory.

* This display is momentary and will process to next output

02/25/83
08:26:19

_

Time & Date will be displayed on screen if microprinter power switch is "ON". Screen contents will be copied to microprinter.

FAIRCHILD
AVIATION RECORDERS

_

The following message is output to the microprinter (only if on) to complete the historical record should the operator desire a hardcopy.

AIRCRAFT #_____

TYPE _____

The following message is output to the LCD screen and copied to the microprinter (if on). It indicates the ARINC mode of operation.

ARINC

542 ELECTRIC

This display is followed by a request for information regarding the on-board air data system utilized. This data must be input by the operator to ensure the proper selection of the mathematical algorithmn used by the program in subsequent engineering units conversions.

SECTION 12

INDICATED AIRSPEED
SYSTEM
IS 565 IAS USED?
(Y,N) -

The operator will enter a 'Y' if the 565 system is used while an 'N' indicates the 545 system is in effect. A default to 'N' after a programmed interval (≅5 secs) times out provides an automatic data without an operator input.

Next display RQ input from operator

(NOTE: NOT OUTPUT TO MICROPRINTER)

OPTIONS: Y - Selftest - Data used by program is generated by program itself.

N - No Selftest - Data is supplied by external bit stream - accessed by real time program.

* If a selection is NOT made - Auto default to real time program in ≅5 seconds.

3. SELECT Y

RESULT:

TEST DATA PARAMETERS
DATA INCREMENT =4
DO YOU WISH ANOTHER?
(Y, N) -

Additional input from operator required to define selftest operating parameters.

OPTIONS: Y = Any input (From range to be specified)

N = Programmed increment of 4 Data counts.

(4 counts is smallest increment in order to generate reasonable output displays in engineering units.)

* No Default - Selection must be made Y or N are only inputs accepted.

SECTION 12

4. SELECT Y

RESULT:

```
WHAT INCREMENT?
RANGE = 0 to 4095
? -
```

Additional input from operator required to define selftest data increment. Zero is legitimate input as this represents minimum parameter value which will not change.

4095 is maximum (12-bit Data Value) - Increment of 4095 will result in full scale values being repeated.

* No Default - Selection (Numeric) must be made followed by <CR> : Anything else would result in redo? Output by Basic. Interpreter requesting another input. For example - If an 'F' is entered.

RESULT:

```
RANGE = Ø to 4095
? F
? REDO
? -
```

5. ENTER 5000 <CR>

RESULT:

```
***ERROR***
INCREMENT TOO HIGH
RANGE Ø TO 4095
```

Error message output which is explanatory, supplemented by Parisian Police Siren.

After error msg timeout, program will take you back to Step 4.

Two consecutive Y entries will get you back here.

6. Enter legitimate increment.

ENTER 10 <CR>

RESULT:

```
INITIAL DATA VALUE = Ø
DO YOU WISH ANOTHER?
(Y,N)
```

OPTIONS: Y = ANY, FROM RANGE TO BE SPECIFIED

N = DEFAULT FALUE OF Ø

If Y entered go to 7

If N entered go to 8

7. ENTER Y

RESULT:

```
WHAT INITIAL VALUE?
? -
```

Program requires Data Base Reference (any value from 0 to Maximum value of 4095 is accepted). Go to 8.

8. ENTER 4096 <CR>

RESULT:

```
***ERROR***
INITIAL VAL TOO HIGH
RANGE Ø TO 4Ø95
```

Another error msg. with accompanying wail. After delay it will return to 6.

9. If legitimate # entered in 7 or N (accepting default of Ø) in Step 6.

RESULT:

```
DO YOU WISH TO
SELECT PARAMETERS
FOR OUTPUT
(Y=YES, N=ALL)
```

Program RQ's information to set-up output data list.

SECTION 12

Since Microprinter or LCD screen can only handle 3 parameters/line at a time, the operator can set-up a list so only desired parameters are output, thereby speeding up the process.

*AUTOMATIC DEFAULT OF N (ALL PARAMETERS) OCCURS IN ≅5 SECONDS IN EVENT QUERY IS NOT RESPONDED TO. THIS ENSURES THAT ONCE PROGRAM IS INITIATED - NO FURTHER INPUT IS REQUIRED TO OUTPUT DATA. REAL TIME DATA WILL BE OUTPUT ON LCD SCREEN OR MICROPRINTER (IF ON) THROUGH DEFAULTS IMBEDDED WITHIN THE PROGRAM.

If Y is selected - (Operator to determine parameter output list, go to 10).

If N is selected - (All parameters in Data Stream to be output, go to 12).

10. RESULT:

TIME (Y, N) ? -

Operator is queried on whether the first parameter "TIME" is to be output.

A (Y) is the only affirmative response accepted.
An (N) is the accepted negative response.

*HOWEVER ALL RESPONSES MUST BE FOLLOWED BY A <CR> . IN ORDER TO EXPEDITE THE GENERATION OF THE LIST, A <CR> IS ACCEPTED AS A DEFAULT FOR AN (N) ENTRY.

ENTER A <CR>

RESULT:

TIME (Y,N) ?
ALT C (Y,N) ? -

SECTION 12

The next query is output. This will continue, taking the operator through the entire list. The screen will scroll upward always displaying the last 4 lines.

ENTER <CR> for all entires.

RESULT:

```
***ERROR***
NO PARAMETERS HAVE
BEEN SELECTED
FOR OUTPUT
```

An error msg will be output with suitable accompanying alarm. The program, after a suitable time delay for msg consumption will return to Step 9.

Quickly enter a Y to inhibit the auto default - the program will return you to Step 10 once again.

11. Select Time, Altitude and Airspeed by entering a Y<CR> after the respective queries when they appear.

```
TIME (Y,N) ? Y
ALTITUDE (Y,N) ? Y
AIRSPEED (Y,N) ? Y
VERT ACC1 (Y,N) ?
BINARY WD (Y,N) ?
HEADING   (Y,N) ?
VERT ACC2 (Y,N) ?
```

12. This last operator defined input is then requested.

```
DO YOU WISH
 HARDCOPY
(EXTERNAL PRINTER)
(Y,N) ?
```

This input determines whether output is to be over the RS-232 channel to an external printer.

*THERE IS AN AUTO DEFAULT HERE IF AN INPUT IS NOT MADE WITHIN ≅5 SECONDS. A DEFAULT TO N IS TAKEN BY THE PROGRAM.

IF Y IS INPUT THE OPERATOR IS QUERIED AS TO THE TYPE OF PRINTER SUPPORTED BY THE PROGRAM. GO TO STEP 13; IF N GO TO STEP 15.

13. ENTER Y

RESULT:

RS-232 PROTOCOL:
1=EPSON MX-80
2=TI SILENT 700
SELECT 1 OR 2? -

OPTIONS: AS INDICATED BY MESSAGE. AS RESULT OF EITHER 1 OR 2 SELECTED. THE ACTUAL PROTOCOL UTILIZED BY THE PROGRAM FOR THE PRINTER SELECTED IS THEN OUTPUT TO ENSURE COMPATIBILITY.

14. SELECT 1 <CR>

BAUD RATE 4800
WD LENGTH 8BITS
PARITY NONE
STOP BITS 2

SELECT 2 <CR>

BAUD RATE 300
WD LENGTH 8BITS
PARITY NONE
STOP BITS 2

In either case whichever is selected - the following message will appear on the LCD screen and all further output will be across the RS-232 interface. This msg is output to inform the operator what is taking place.

In the event the printer is 'OFF LINE' or the interface is not active, the program will 'HANG'. This msg will aid the operator and inform him that the interface is not active in the event it does 'HANG'.

OUTPUT ENABLED
TO
EXTERNAL PRINTER

15. Selected data is now converted to engineering units and output. If hardcopy had been requested, it is output along with Date/Time. Parameter names and engineering unit I.D. are output once every 50 lines.

If hardcopy had not been requested and the microprinter was on, the output would be:

```
* TIM     ØALT    Ø
 AIR  1ØØ.Ø
* TIM    4ØALT    3
 AIR  1ØØ.3
* TIM    8ØALT    6
 AIR  1ØØ.7
* TIM   12ØALT    9
 AIR  1Ø1.Ø
```

The asterisk used in this display is to indicate a new frame of data. It always prefixes the first selected data word in every frame.

16. At the end of each frame, the keyboard is scanned for possible entries. Accepted entries along with definitions of same are:

KEY	FUNCTIONS
R	Return to program start to begin again - redefine parameters.
E	Output to external printer over RS-232 port. If hardcopy had previously been selected, the program will not request printer selection or display protocol in use.
H	Causes the output of a help file which contains definitions of all abbreviations used in the data displays.

SECTION 12

Space Bar — To terminate hard copy in case it had been in effect. Output will return to microprinter (if on) and LCD screen. ENTERING AN E as in above case will resume hardcopy output.

When in doubt or trouble exists -

PRESS MENU and select 3 to restart program or Break then PF5.

This will cause the program to be run from its start once again.

17. A typical real-time display of all flight parameters augmented by the output of the help file is listed below:

```
* TIM 2250 ALT 10000
 AIR 154.1 HDG 135.7
 VA1 + 5.92 VA2 + 5.92
 B1010000l -
* TIM 2270 ALT 10000
 AIR 154.1 HDG 135.7
 VA1 + 5.96 VA2 + 5.96
 B1010000l -


* TIM 2280 ALT 10000
 AIR 154.1 HDG 135.7
 VA1 + 5.92 VA2 + 5.92
 B1010000l -

 TIM=TIME/SECONDS
 ALT=ALTITUDE/FEET
 AIR=AIRSPEED/KNOTS
 HDG=HEADING/DEGREES
 VA1=VERT ACC(1st.5SEC)/
 G'S
 VA2=VERT ACC(2nd.5SEC)/
 G'S
 B=BINARY DATA/BDMFTSPE
* TIM 2310 ALT 10000
 AIR 154.1 HDG 135.7
 VA1 + 5.92 VA2 + 5.92
 B1010000l -
```

SECTION 12

All entires in the help file are self-explanatory with the exception of the binary word. The individual discrete bits are defined as follows: (Refer also to FAR #32 - 'ARINC 542 Format')

B - Binary 2/Marker Beacon (Ø = on)

D - Trip/Date (slow code)

M - Microphone (Ø = on)

F - Fault (1 = fault indication)

T - Test (1 = track change in progress)

S - CPU Status (1 = fault condition)

P - Phase (alternates I/O with track change)

E - Mode (1 = Electric, Ø = Pneumatic)

18. Typical hardcopy output (external printer via RS-232 channel) contains all flight parameters regardless of the operator defined parameter list. A sample output of simulated flight data follows:-

08/08/83

10:41:07

TIME SECS	ALT-C FEET	ALT-F FEET	AIRSP KNOTS	HEAD DEG	VACC1 G/S	VACC2 G/S	BINARY BDMFTPSE
90	-167	-167	0.0	270.0	+0.92	+0.92	10100000
100	-167	-167	0.0	270.0	+0.92	+0.92	10100000
110	-167	-167	0.0	270.0	+0.92	+0.92	10100000
110	-167	-167	0.0	270.0	+0.92	+0.92	10100000
120	-167	-167	0.0	270.0	+0.92	+0.92	10100000
130	-167	-167	0.0	270.0	+0.92	+0.92	10100000
140	-167	-167	0.0	270.0	+0.92	+0.92	10100000

SECTION 13

PROGRAM NAME: DFR FUNCTIONAL TEST (542E)
PROGRAM NO: 17P353
TAPE NO.: 17P422

This program verifies the Digital Flight Recorder (DFR) is both functional and operational. The DFR is operated in the ARINC 542 electric mode. Ten frames of recorded data re input to the PDDU, where the input signal is conditioned and subsequently examined by the program. The data is then evaluated, stored and compared to predetermined limits. If all data is within limits a "test pass" indication is output accompanied by all first and last data frame parameters in engineering units.

In the event the data, at the time, during the evaluation period (ten frames) exceeds the limits imposed, a 'test fail' indication accompanied by the data parameters failing to meet those limits are output.

OPERATION

1. TURN POWER SWITCH ON

Menu will appear on LCD screen.

(NOTE: ALL OPERATOR INPUTS ARE UNDERLINED.)

CTRL/@ INITIALIZE
1 MONITOR
2 BASIC
3 DFR TEST

(NOTE: IF PROGRAM DOES NOT APPEAR AT NO. 3, PROCEED TO AUTO BOOT PROGRAM NO. 17P350, TAPE NO. 17TE422, SECTION #6.)

OPERATOR IS QUE'D FOR INPUT

a. Accesses Monitor (Machine Language Function)
b. Accesses Basic Interpreter
c. Runs resident DFR TEST Program

2. DEPRESS '3' (To select DFR TEST Program)

COPYRIGHT 1982 BY
MICROSOFT & EPSON
P1:DFR TEST 8822 Byt
>

Screen will display manufacturers copyright msg.; also P1:DFR TEST 8822 Bytes informs operator that the DFR TEST program resides in program area #1 (There are 5 memory partitions - Hence 5 programs can be resident simultaneously) and it occupies 8822 Bytes of Memory.

3. PROGRAM START-UP

Screen will be cleared with a reminder for the operator to activate the hardcopy device (microprinter) output.

```
TURN ON
MICROPRINTER
-
```

The operator can activate the printer by sliding the Printer switch to the right (ON).

(NOTE: The printer can be left in the off position with the program continuing to run much faster, however, the hardcopy will not be output.)

4.

```
08/05/83
15:24:21
-
```

Time & Date will be displayed on screen documenting the test. Screen contents will then be copied to microprinter.

5.

```
*FAIRCHILD*
AVIATION RECORDERS
-
```

This display is copied to microprinter indicating program start.

6.

```
-
      DIGITAL
FLIGHT RECORDER
ARINC 542E_
```

This next display specifies the DFR operational mode and if the printer is ON, is copied to it.

SECTION 13

7.

DFR
ON BOARD AIRCRAFT
FUNCTIONAL
TEST

This display lists the Program Name. This also copied to the printer.

DFR SER #_____
Track # _____
Aircraft #_____
Type_____

While the previous display is held on the LCD screen, the microprinter continues to print. The output above is furnished to complete the hardcopy output documenting the DFR#, the track the test was performed on, and information regarding the aircraft I.D.

8.

INDICATED AIRSPEED
SYSTEM
IS 565 IAS USED?
(Y,N)-

This display is output to prompt the operator for information regarding the type of on-board air data computer.

If 545 Input 'Y'
If 565 Input 'N'

If no input is made within 5 secs, a default to 'N' is implemented and a 545 system is assumed. This input is necessary in order to provide an accurate airspeed output as it controls the selection of the algorithm used in the engineering units conversion.

SECTION 13

9.

PROGRAM PDDU
AS FOLLOWS:-

This next display is held on the screen with accompanying audio tones which are designed to get the operator's attention. It is followed by instructions to the operator to ensure proper PDDU set-up.

10.

573/542 To 542
TRACK SELECT TO A
READ/WRITE TO READ
HIT <CR> TO PROCEED.

PDDU Set-up Instructions:

Switch	Set To	PURPOSE
573/542	542	Ensures internal bit-sync output is Harvard BI-Ø
Track Select	A	Places track selection in auto. The HX-20 will automatically read the track being recorded upon.
Read/Write	Read	The HX-20 is reading data from tape.

(NOTE: The program execution is halted here until a <CR> is entered. Pressing the return key will cause the program to proceed.)

11.

ACQUIRING DATA

The screen is then cleared and this display that follows indicates the HX-20 is now in the data acquisition routine acquiring the first frame of data.

SECTION 13

12.

ACTIVATE
MICROPHONE KEY
TRIP/DATE ENCODER
FOR 5 SEC

Prior to the evaluation of the first data frame the operator is now requested to activate both the microphone key and trip/date recorder. If he so chooses these items will be considered in the overall test pass/fail decision. If he chooses to ignore them at this point, the test will continue.

Five seconds are required (minimum) to ensure capture of both status bits recorded on tape.

13.

EVALUATING DATA
FRAME 1

The program now evaluates the data taken during the first sample frame and acquires frame #2 data. This action continues with the display updated to indicate what data frame is being considered.

14.

EVALUATING DATA
FRAME 10

Last display in the 10 frame sequence.

15.

10 DATA FRAMES
EVALUATED

NO ERRORS FOUND

This display is output at this time when all data parameters in the 10 frame sampling are found to be in limits.

SECTION 13

If any parameter is found not to be within the limits specified below, this display will not be output and the test will fail.

Altitude	<-500 or > 5000 ft any sample.
Airspeed	>50 KNOTS any sample.
Heading	>5^{0} BETWEEN samples.
VACC	<0.8G or > 1.2G any sample.
FAULT	← if set any sample.
CPU STATUS	← if set any sample.

16.

MIC KEY VERIFIED
T/D ENCODER VERIFIED

TEST COMPLETED PASS*

This display is output next and indicates that both binary bits have been verified and the test passes, since no parameter errors were experienced during the 10 frame sample (see previous display).

17.

MIC KEY NOT VERIFIED
T/D NOT VERIFIED
WANT TO BYPASS
(Y,N) ?

In the event the binary bits had not been activated or a failure in the instrumentation system or Flight Recorder caused the proper response not to be recorded during the sample period, the above message is displayed on the LCD screen. (This display is not copied to the printer.)

SECTION 13

The operator at this point can leave the test site and without additional help activate the required inputs. The program will remain here and continually check both of these discrete bits.

As each bit is monitored and a change is experienced, a message similar to #14 is output. However, both discrete bits have to be found to working or the program will remain here with a suitable message output informing the operator of the conditions present.

```
T/D ENCODER VERIFIED
MIC KEY NOT VERIFIED
WANT TO BYPASS MIC
(Y, N) ?
```

The operator also can elect the bypass option which will cause the program to bypass verification of either or both these discrete bits and output the Pass/Fail message as in #14.

(NOTE: These bits are not considered in the Pass/Fail decision, however if verified the appropriate message is output to the printer for the historical record.)

18.

```
LOCATION DEPENDENT
PARAMETER CHECK
(ALT REF 29.92HG)

HEAD (DFR)     120.1°
     (COCKPIT).......

ALT-E (DFR)    1004 FT
      (COCKPIT)......
```

SECTION 13

This message is only output to the microprinter. It is intended to provide a means to verify and document the two parameters that are dependent upon the aircraft's position and geographical location. It is output at the end of the test and allows the operator the opportunity on a post-test basis, to manually enter the aircraft indicated values for these parameters.

19.

```
SAMPLE DATA OUTPUT

FRAME #1        FRAME #10
 TIM   70         TIM  130
 ALT 1004         ALT 1004
 AIR  7.9         AIR  8.2
 HDG120.1         HDG120.1
 VA1+0.92         VA1+0.87
 VA2+0.92         VA2+0.87

TEST PERFORMED BY

--------------------


08/05/83
15:27:54
-
```

This display is output to the printer only; the last in the overall sequence of a successful test. It lists the data as taken during the first and last data sampling in engineering units. It is followed by a place for the signature of the test operator and a repeat of the day and time.

Comparisons of the first and last parameters as well as the overall time will yield the overall data excursions experienced as well as the overall test time.

SECTION 13

20. The tape below indicated an entire test performed with an ultimate Fail decision.

```
08/04/83
13:47:20
-
    ±FAIRCHILD±
 AVIATION RECORDERS
-
      DIGITAL
  FLIGHT RECORDER

     ARINC 542E_

         DFR
 ON BOARD AIRCRAFT
     FUNCTIONAL
         TEST_

DFR SER  #___________

TRACK    #___________

AIRCRAFT #___________

TYPE      ___________


MIC KEY VERIFIED

TEST COMPLETED FAIL*
               -----

LOCATION DEPENDENT
PARAMETER CHECK
(ALT REF 29.92HG)

 HEAD (DFR)    135.7 o

      (COCKPIT) _______

ALT-E (DFR)     1004 FT

      (COCKPIT) _______


SAMPLE DATA OUTPUT
DATA PARAMETERS
OUT OF SPEC

FRAME    DIFF  PARAMETER
   3    -63.5 HDG  72.2
   3        1     STATUS
   4        1     STATUS
   5        1     STATUS
   6        1     STATUS
   7        1     STATUS
   8     63.5 HDG 135.7
   9    -63.5 HDG  72.2
   9        1     STATUS
  10     63.5 HDG 135.7
TEST PERFORMED BY

--------------------


08/04/83
13:50:37
```

SECTION 13

The data sample output lists all parameters that were found to exceed the specified limits. Each parameter is listed in order with the sample that was found to be bad and the difference or change from the previous sample. The actual value in engineering units is also output.

ALL TRACK TEST

Following the DFR Functional test, the screen is cleared and a menu is output, presenting the operator with two options:

```
PROGRAM OPTIONS:
1. REPEAT FUNC TEST
2. ALL TRACK TEST
SELECT ONE
```

He can either repeat the previously run functional test by entering a '1' or proceed to the ALL Track Test by selecting to input a '2'.

This test provides a means to sample recorded data on all tracks. This is actual flight data and not the data presently being recorded on tape.

1.

```
06/21/83
09:52:03

DFR
ON BOARD AIRCRAFT
ALL TRACKS
TEST
```

The date and time is output to the printer along with the name of the program being run. This message is copied to the microprinter for historical purposes.

2.

```
SELECT TRACK TO BE
TESTED
(TRACK SEL SW 1-6)
ENTER TRACK #? _
```

SECTION 13

The operator is then queried for the track to be tested. He first selects the DFR data to be evaluated by placing the track select switch to the desired track. (NOTE: This selection does not affect the record operation.) Recording on tape continues on the track displayed by the Track Display (LED).

The operator also inputs the same track # into the computer by entering the appropriate #. This information will be used for the subsequent report output. If the entry is other than a number (1-6) the display will be refreshed and Step 2 repeated.

3. TRACK #2

10 DATA FRAMES
EVALUATED

NO ERRORS FOUND

TRACK # 2 PASS*

SAMPLE DATA OUTPUT

FRAME #1	FRAME #10
TIM13950	TIM14030
ALT 1004	ALT 1004
AIR 40.6	AIR 40.3
HDG135.7	HDG135.7
VA1+ 0.92	VA1+ 0.87
VA2+ 0.92	VA2+ 0.87

After ten frames are input and evaluated a report on the respective track is output.

The limits the data is compared to is conceivably realistic flight data. These limits are as follows:

Altitude	-500 to 40,000 feet.
Airspeed	<420 knots.
Heading	<50 degrees (sample-sample).
Vertical Accel	0.4 G to +1.6G.
Fault indicator or CPU Status Bit Set.	

SECTION 13

4. TRACK # 4

TRACK # 4 FAIL*

SAMPLE DATA OUTPUT
DATA PARAMETERS
OUT OF SPEC

FRAME	DIFF		PARAMETER
2	-63.5	HDG	72.2
2	1		STATUS
3	1		STATUS
4	1		STATUS
5	1		STATUS
6	1		STATUS
7	1		FAULT
7	1		STATUS
8	1		FAULT
8	1		STATUS
9	63.5	HDG	135.7

If any parameter exceeds the limits listed in Section 3, it is output as shown above, properly tagged with the data sample I.D. in which the parameter was received.

5.

```
SELECT TRACK TO BE
      TESTED
(TRACK SEL SW 1-6)
ENTER TRACK #? _
```

The program returns to the same point as in Section #2, prompting the operator for another track to be read and the testing to be continued. However, if the last track (#6) was checked, the applicable report will be output and the program will not return here, but rather it is assumed that all tracks have been tested and the program terminates as shown below:

SECTION 13

6.

TRACK # 6

TRACK # 6 FAIL*

SAMPLE DATA OUTPUT
DATA PARAMETERS
OUT OF SPEC

FRAME	DIFF	PARAMETER
1	4.5	VA1 +6.13
1	4.5	VA2 +6.13
2	4.5	VA1 +6.13
2	4.5	VA2 +6.13
3	4.5	VA1 +6.13
3	4.5	VA2 +6.13
4	4.5	VA1 +6.13
4	4.5	VA2 +6.13
5	4.5	VA1 +6.13
5	4.5	VA2 +6.13
6	4.5	VA1 +6.13
6	4.5	VA2 +6.13
7	4.5	VA1 +6.13
7	4.5	VA2 +6.13
8	4.5	VA1 +6.13
8	4.5	VA2 +6.13
9	4.5	VA1 +6.13
9	4.5	VA2 +6.13
10	4.5	VA1 +6.13
10	4.5	VA2 +6.13

TEST PERFORMED BY

_____

06/21/83
11:45:38

The report is output with the test operator's signature request along with the date and time the test was completed.

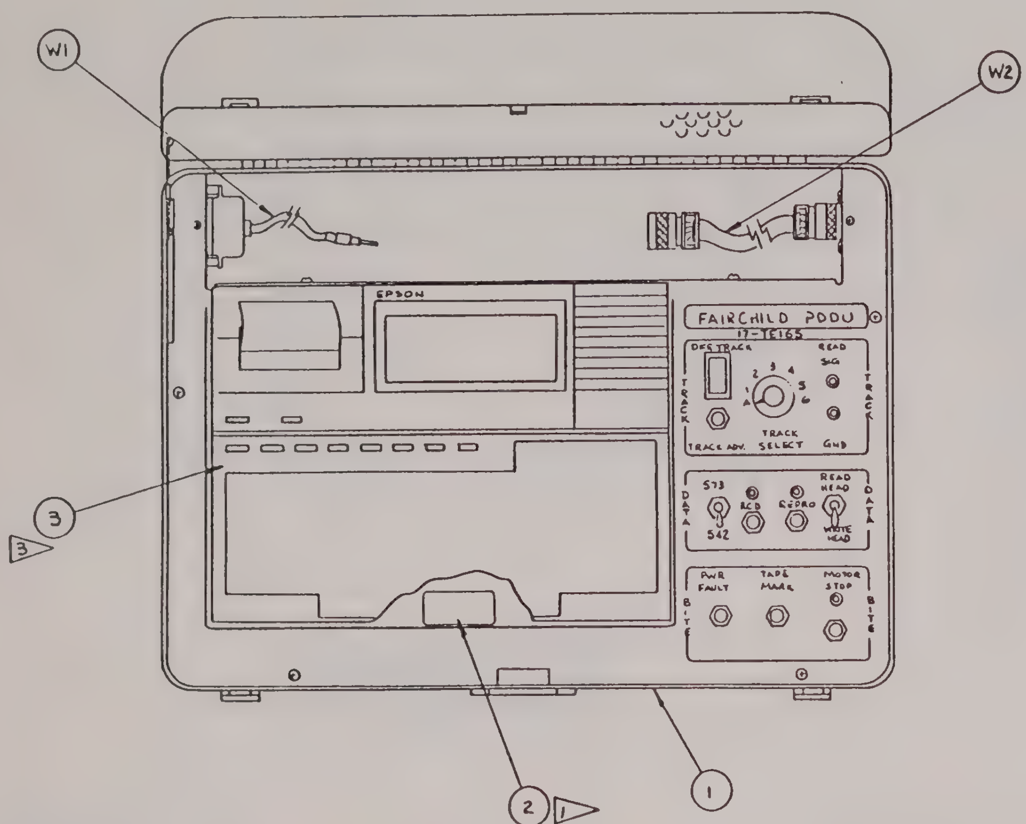

17-TE165

NAMEPLATE DATA :
NAME: PORTABLE DATA DISPLAY UNIT
PART NO.: 17-TE165
SERIAL NO.: ______ DATE: MONTH/YEAR
MODEL NO.: N/A

3. TO MOUNT COMPUTER (ITEM 3), REMOVE PEEL-OFF VINYL FROM "SCOTCHMATE" FASTENERS AND FIRMLY PRESS COMPUTER DOWN, BEING SURE TO CENTER IT WITHIN THE SILK SCREENED AREA, AS SHOWN.

2. PLACE ITEMS 4,5,& 6 AND AC ADAPTOR & MAG TAPE (FURNISHED WITH COMPUTER) INSIDE PLASTIC ZIP-LOCK BAG (ITEM 7) AND SHIP WITH UNIT. COMPUTER MANUALS, FURNISHED BY VENDOR, AND PDDU MANUAL (REF 1 ON PL) ALSO SHIPPED WITH UNIT.

1. STAMP NAMEPLATE WITH APPROPRIATE DATA, SEE DETAIL.

NOTES:

-00	FINAL	PDD-1	ON 00 CONFIG. FOR PARTS LIST SEE PL 17-TE165
CONFIG	NEXT ASSY NO	USED ON	
APPLICATION			
MATERIAL	~	GRADE II	
TREATMENT OR FINISH	~	CATEGORY II	

FAIRCHILD AVIATION RECORDERS

ASSEMBLY, PORTABLE DATA DISPLAY UNIT (P.D.D.U.)

C | 06141 | 17-TE165

FORM 3/2/1432

HOLE/COMPONENT CHART

ARTWORK REVISION INDEX

REVISIONS

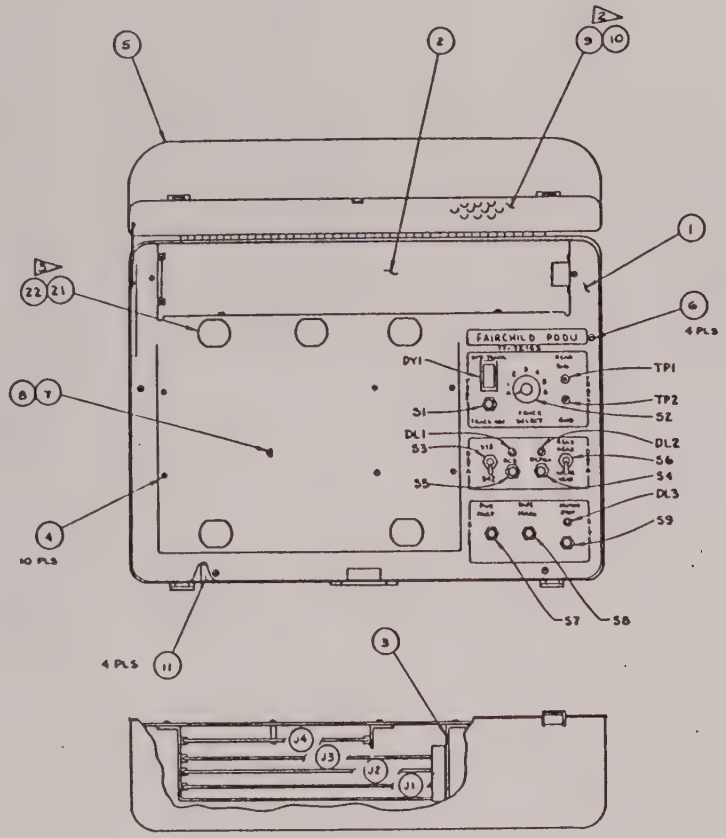

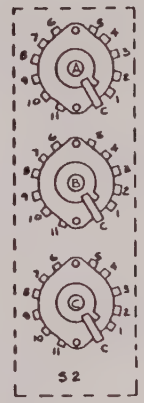

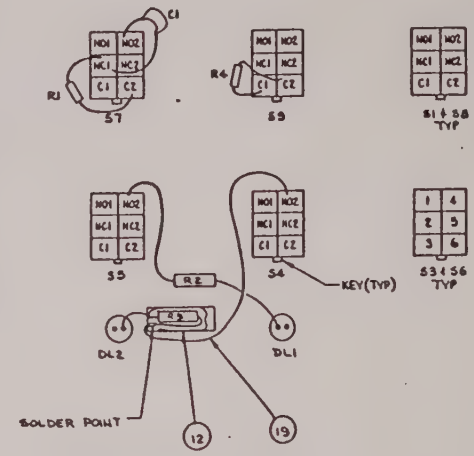

TYP INSTALLATION FOR R2 & R3

3. ADHERE ITEM 21 ONTO PANEL PER ARTWORK MARKINGS. THEN MOUNT ITEM 22 DIRECTLY ON TOP OF ITEM 21 WITH PEEL-OFF VINYL UP.

2. ITEM 8 USED TO ADHERE FOAM TO INSIDE LID.

1. WIRE PER WIRELIST USING ITEMS 12 - 20.

NOTES:

ON 00 CONFIG FOR PARTS LIST SEE PL 17-A263

-00	17-TE165	PODU	

FAIRCHILD AVIATION RECORDERS

SUB-ASSEMBLY, P.D.D.U.

D 06141 17-A263

17-A263

17D17-0434

REVISIONS				
SYM.	DESCRIPTION	EFFECTIVITY	DATE	APPROVED

ARTWORK REVISION INDEX	
SHEET NO.	REVISION

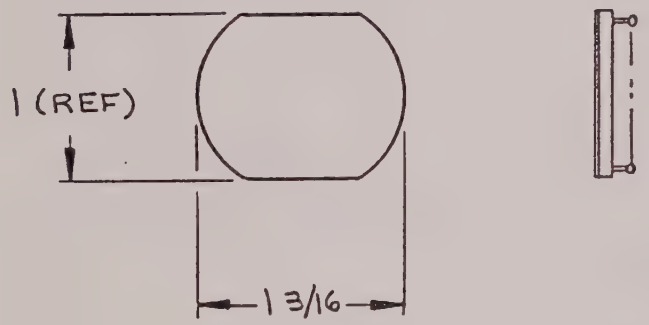

-00	17-A263	PDDU
CONFIG.	NEXT ASSY. NO.	USED ON
APPLICATION		
MATERIAL SEE PL (1 IN WIDE "SCOTCHMATE")	GRADE II	17D17-0433
TREATMENT OR FINISH	CATEGORY II	SIMILAR TO

FOR PARTS LIST SEE PL- 17D17-0434

UNLESS OTHERWISE SPECIFIED
TOLERANCES: DECIMALS XX = ±.03, XXX = ±.010; ANGLES ±1/2°; SURFACE FINISH 125
DIMENSIONS ARE IN INCHES.
THREADS CLASS 2A OR 2B PER MIL-S-7742.
REMOVE BURRS AND BREAK EDGES .020 MAX
TOLERANCES PER SPEC. 2878.
DIMENSIONS INCLUDE APPLIED FINISH.
WORKMANSHIP STANDARDS APPLY.
DO NOT SCALE DRAWING
DO NOT APPLY PART NO. IDENTIFY PER SPEC 13406
LOCATE APPROX. AS SHOWN

		DATE
DRAWN BY		
DESIGNER		
CHECKER		
DESIGN ENGINEER		
PROJECT ENGINEER		
APPROVED		
APPROVED		

FAIRCHILD AVIATION RECORDERS
DATA SYSTEMS DIVISION OF SANGAMO WESTON, INC
PO BOX 3041 SARASOTA FLORIDA 33578

MOUNT, 1 IN. X 1 3/16 IN. "SCOTCHMATE"

SIZE	CODE IDENT NO.	DRAWING NO.	REV.
A	06141	17D17-0434	

SCALE 1/1 SHEET OF

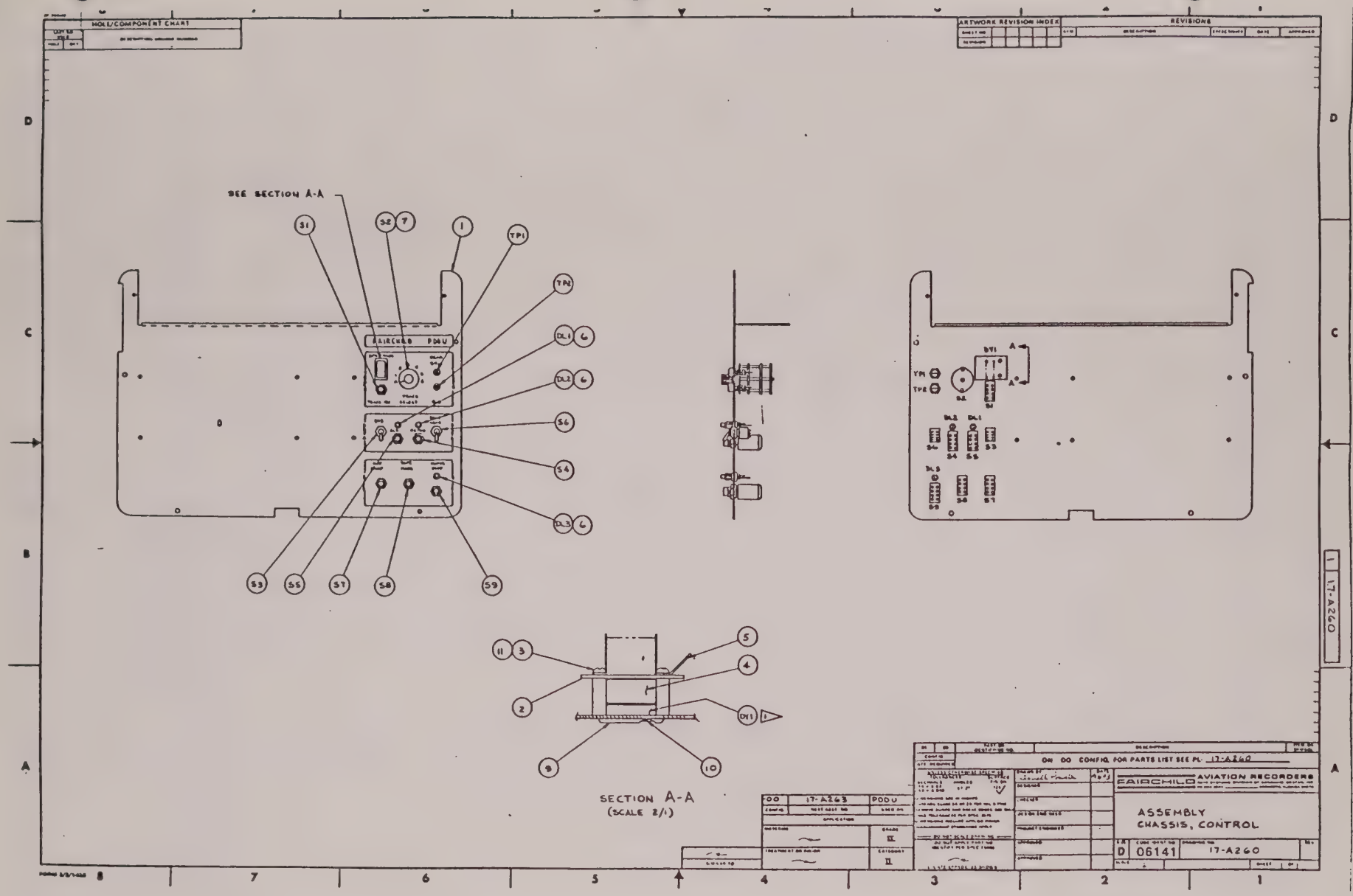
HOLE/COMPONENT CHART
ARTWORK REVISION INDEX
REVISIONS
SEE SECTION A-A
S1
S2 7
1
TP1
TP2
DL1 6
DL2 6
S6
S4
DL3 6
S3
S5
S7
S8
S9
FAIRCHILD PODU
DY1
A
TP1
TP2
DL2
DL1
S6
S4
S5
S3
DL3
S9
S8
S7
11 3
5
4
2
DY1 1
9
10
SECTION A-A
(SCALE 2/1)
ON DO CONFIG. FOR PARTS LIST SEE PL. 17-A260
DO
17-A263
PODU
FAIRCHILD AVIATION RECORDERS
ASSEMBLY
CHASSIS, CONTROL
D
06141
17-A260
1
17-A260

17D17-0430

REVISIONS				
SYM.	DESCRIPTION	EFFECTIVITY	DATE	APPROVED

ARTWORK REVISION INDEX

SHEET NO.	REVISION

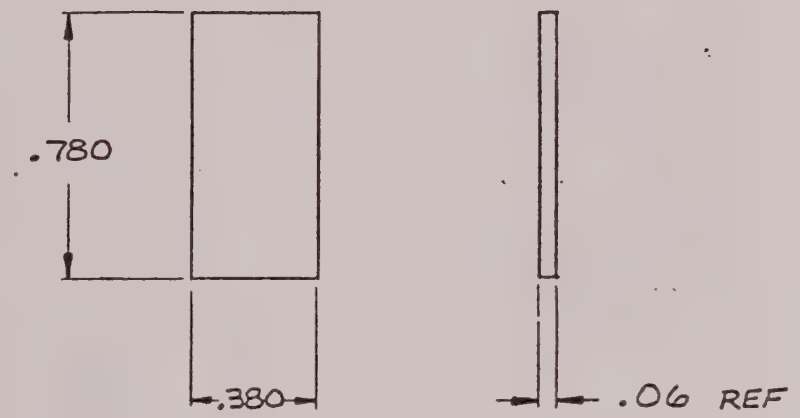

00	17-A260	PDDU
CONFIG.	NEXT ASSY. NO.	USED ON
APPLICATION		
MATERIAL SEE PL (.06 THK PLASTIC, RED)	GRADE II	
TREATMENT OR FINISH	CATEGORY II	SIMILAR TO

FOR PARTS LIST SEE PL- 17D17-0430

UNLESS OTHERWISE SPECIFIED
TOLERANCES: DECIMALS XX = ±.03, XXX = ±.010; ANGLES ±1/2°; SURFACE FINISH 125
DIMENSIONS ARE IN INCHES.
THREADS CLASS 2A OR 2B PER MIL-S-7742.
REMOVE BURRS AND BREAK EDGES .020 MAX
HOLE TOLERANCES PER SPEC. 2875.
DIMENSIONS INCLUDE APPLIED FINISH.
WORKMANSHIP STANDARDS APPLY.
— DO NOT SCALE DRAWING —
DO NOT APPLY PART NO. IDENTIFY PER SPEC 13406

		DATE
DRAWN BY	L. Powell	7/7/13
DESIGNER		
CHECKER		
DESIGN ENGINEER		
PROJECT ENGINEER		
APPROVED		
APPROVED		

FAIRCHILD AVIATION RECORDERS
DATA SYSTEMS DIVISION OF SANDAMO WESTON INC
PO BOX 3041 — SARASOTA FLORIDA 33578

LENS, FILTER, RED

SIZE	CODE IDENT NO.	DRAWING NO.	REV.
A	06141	17D17-0430	

SCALE 2/1 SHEET 1 OF 1

HOLE/COMPONENT CHART		
LAST NO. USED		DESCRIPTION/UNUSED NUMBER
HOLE	QTY.	

ARTWORK REVISION INDEX					
SHEET NO.					
REVISION					

REVISIONS				
SYM.	DESCRIPTION	EFFECTIVITY	DATE	APPROVED

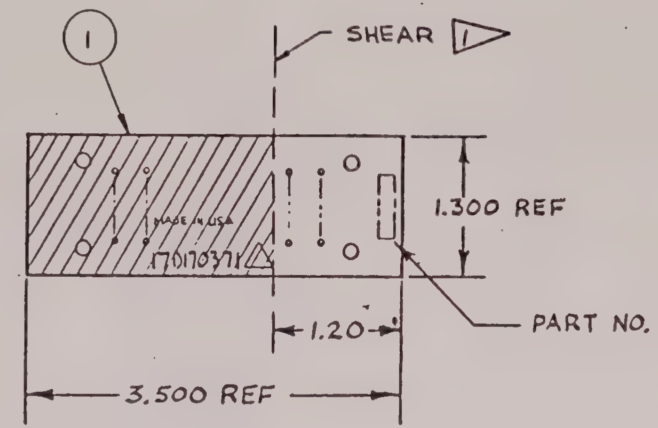

NOTE:

1. CUT BOARD (ITEM 1) ON SHEAR LINE. DISCARD SHADED PORTION.

01	00	PART OR IDENTIFYING NO.	DESCRIPTION	ITEM OR SYMBOL
CONFIG.				
QTY REQUIRED		ON 00 CONFIG. FOR PARTS LIST SEE PL-17D17-0432		

CONFIG.	NEXT ASSY. NO.	USED ON
-00	17-A260	PDDU

APPLICATION

MATERIAL: MAKE FROM 17D17-0371 (SEE PL) — GRADE: II

TREATMENT OR FINISH: — CATEGORY: II

SIMILAR TO: —

UNLESS OTHERWISE SPECIFIED
TOLERANCES — DECIMALS: XX = ±.03, XXX = ±.010; ANGLES: ±1/2°; SURFACE FINISH .125
— DO NOT SCALE DRAWING —
APPLY PART NO. IDENTIFY PER SPEC 13406
LOCATE APPROX. AS SHOWN

		DATE
DRAWN BY	L. Powell	[illegible]
DESIGNER	[illegible]	[illegible]
CHECKER		
DESIGN ENGINEER		
PROJECT ENGINEER		
APPROVED		
APPROVED		

FAIRCHILD AVIATION RECORDERS

DISPLAY MOUNTING BOARD, MODIFIED

SIZE	CODE IDENT NO.	DRAWING NO.	REV.
B	06141	17D17-0432	

SCALE 1/1 — SHEET 1 OF 1

FORM 3/2/1431

1 17D17-0432

HOLE/COMPONENT CHART		
	QTY	
A		.144 DIA
B	7	.250 DIA
C	3	.312 DIA
D	8	.500 DIA.
E	1	.397 DIA.
F	8	C'BORE .128 DIA & .042 DP (TAG SIDE)
G	2	.313 +.003 -.000 DIA (FOR ITEM 2)
H	1	.500 x .500 RECTANGLE
J	1	.191 DIA.

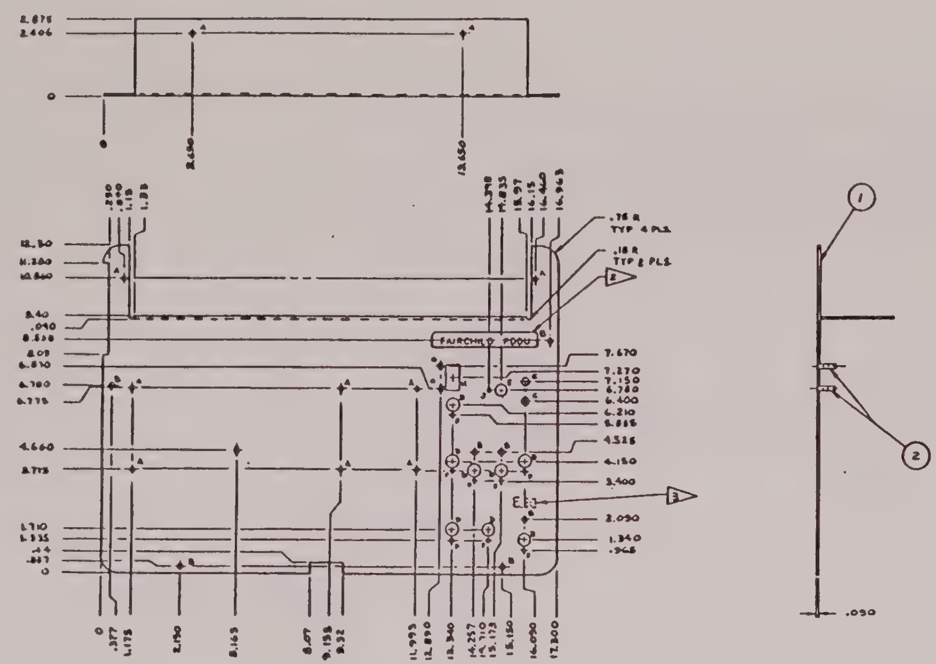

NOTES:

3. LETTER REAR SIDE PER SPEC 902401 AND ARTWORK CONTAINED ON DATA BASE 898-17D17-0422 REV- SHT 2, (STENCIL LETTERS), COLOR: BLK FED-STD 595 #37038.

2. LETTER FRONT SIDE PER SPEC 902401 AND ARTWORK CONTAINED ON DATA BASE 898-17D17-0422 REV- SHT 1, (BLOCK LETTERS), COLOR: LT BEIGE #5002-6982.

1. CLEAR ANODIZE PER SPEC 18405. PAINT PER SPEC 21412, COLOR TEXTURED BLACK NO. 4255.

ON 00 CONFIG FOR PARTS LIST SEE PL 17D17-0422

FAIRCHILD AVIATION RECORDERS

CHASSIS, CONTROL

D 06141 17D17-0422

-00 17-A360 PDDU

MATERIAL SEE PL .090 THK AL, 5052H-32

1 17D17-0422

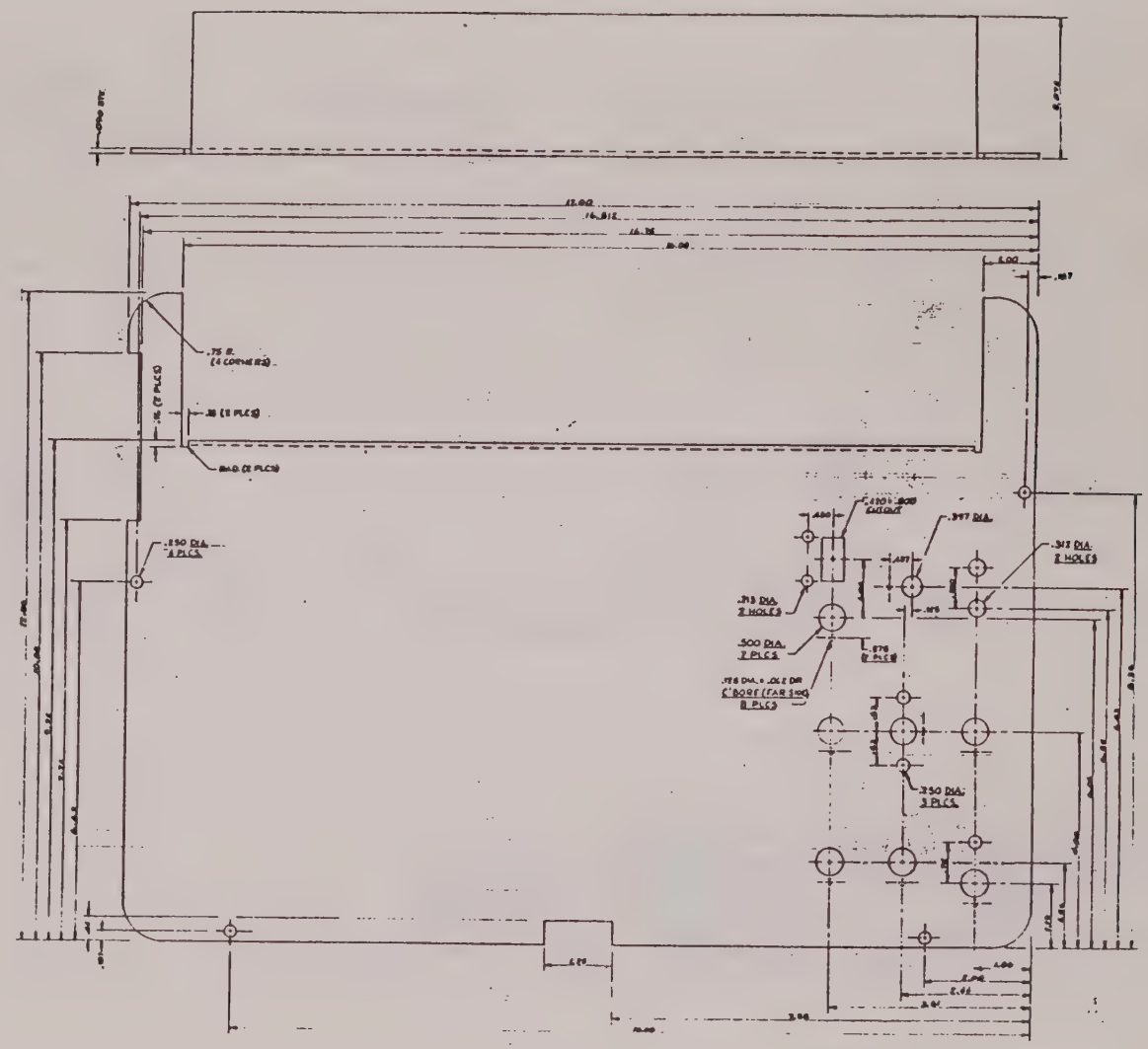

PDDU Chassis

Mat'l: .090 Alum
Finish: Painted Flat Black
TOL'S: .XX - .03
.XXX - .010

Dwn:- W.R. Davis
2/10/63

HOLE/COMPONENT CHART

ARTWORK REVISION INDEX

REVISIONS

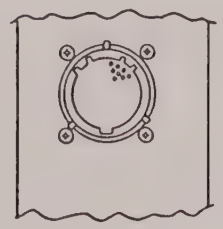

VIEW A-A

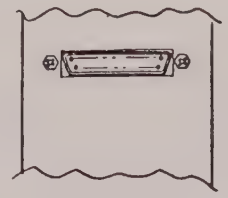

VIEW B-B

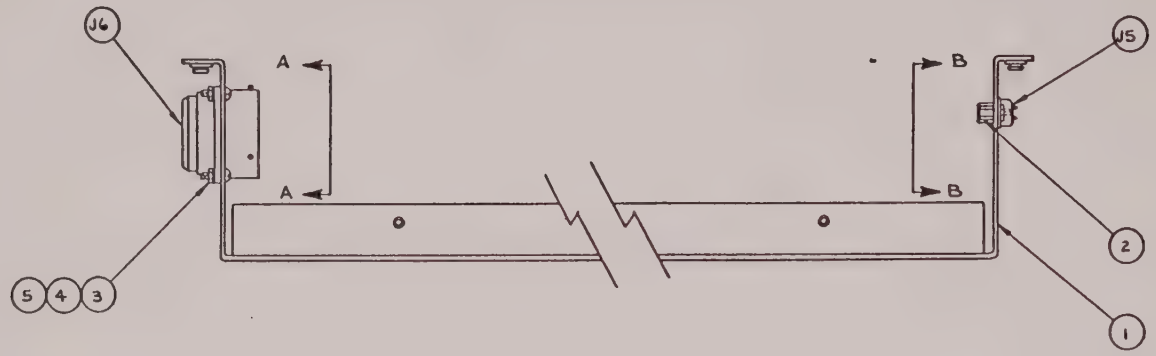

17-A261

ON 00 CONFIG FOR PARTS LIST SEE PL 17-A261

-00 | 17-A263 | PDDU

FAIRCHILD AVIATION RECORDERS

ASSEMBLY
CHASSIS, I/O

C | 06141 | 17-A261

FORM 3/2/1432

4 3 2

HOLE/COMPONENT CHART

LAST DWG. SYM'D	DESCRIPTION
HOLE	QTY

ARTWORK REVISION INDEX

SHEET NO.						
REVISION						

REVISIONS

SYM.	DESCRIPTION	EFFECTIVITY	DATE	APPROVED

D

C

J5

AW17017-0423 (LEFT)

J6

AW17017-0423 (RIGHT)

B

A

QTY	DO	PART OR IDENTIFYING NO.	DESCRIPTION	ITEM OR SYMBOL
COMPL. QTY REQUIRED				

ON 00 CONFIG. FOR PARTS LIST SEE PL

UNLESS OTHERWISE SPECIFIED: TOLERANCES — FRACTIONS ±1/64, DECIMALS .XX ±.03, .XXX ±.010, ANGLES ±1°, SURFACE FINISH 125 — BREAK SHARP EDGES — REMOVE BURRS AND SLIVERS — DO NOT SCALE DRAWING — DIMENSIONS AND TOLERANCES APPLY AFTER PLATING AND FINISHING — IDENTIFY PER APSC 13A08 — MATERIAL AND PROCESS SPECIFICATIONS APPLY

	DRAWN	DATE
	A. Krugoff	11/4/93
	DESIGN	
	B. Powell	11/4/93
	CHECKED	
	DESIGN ENGINEER	
	PROJECT ENGINEER	
	APPROVED	
	APPROVED	

CONFIG.	SHEET ASSY. NO.	USED ON
APPLICATION		
MATERIAL		GRADE
TREATMENT OR FINISH		CATEGORY
SIMILAR TO		

FAIRCHILD AVIATION RECORDERS

ARTWORK
CHASSIS, I/O

SIZE	CODE IDENT NO.	DRAWING NO.	REV
C	06141	AW17017-0423	
SCALE 1/1	905-10-01736	SHEET 1 OF 1	

FORM 3/2/1432

4 3 2 1

HOLE/COMPONENT CHART

ARTWORK REVISION INDEX

REVISIONS

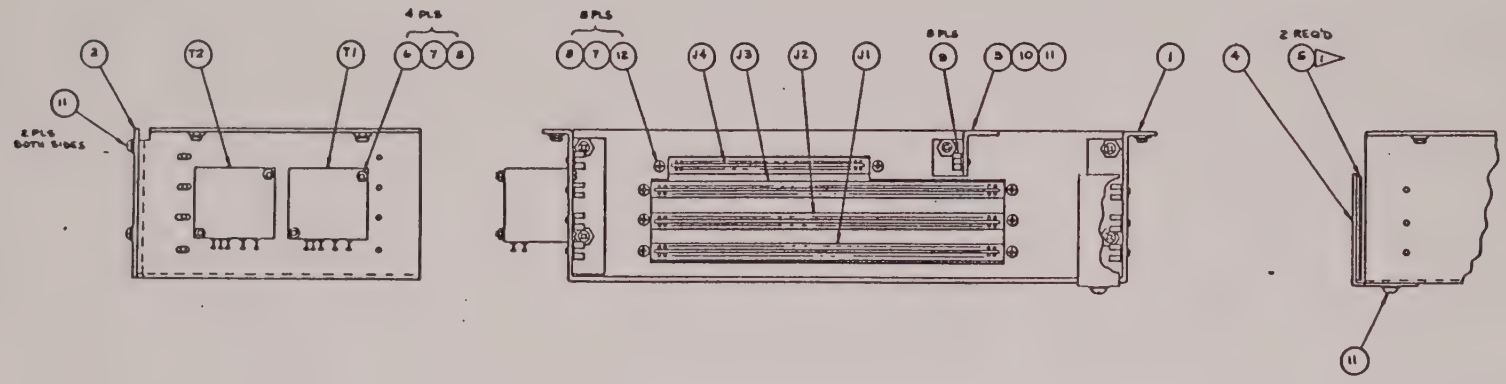

△ INSTALL ONE BUMPER PAD (ITEM 5) ON ITEM 4. INSTALL SECOND BUMPER PAD ON TOP OF FIRST, AS SHOWN.

NOTE :

ON 00 CONFIG FOR PARTS LIST SEE PL 17-A262

-00 | 17-A263 | PDDU

FAIRCHILD AVIATION RECORDERS

CHASSIS ASSEMBLY
CARD CAGE

D | 06141 | 17-A262

17-A262

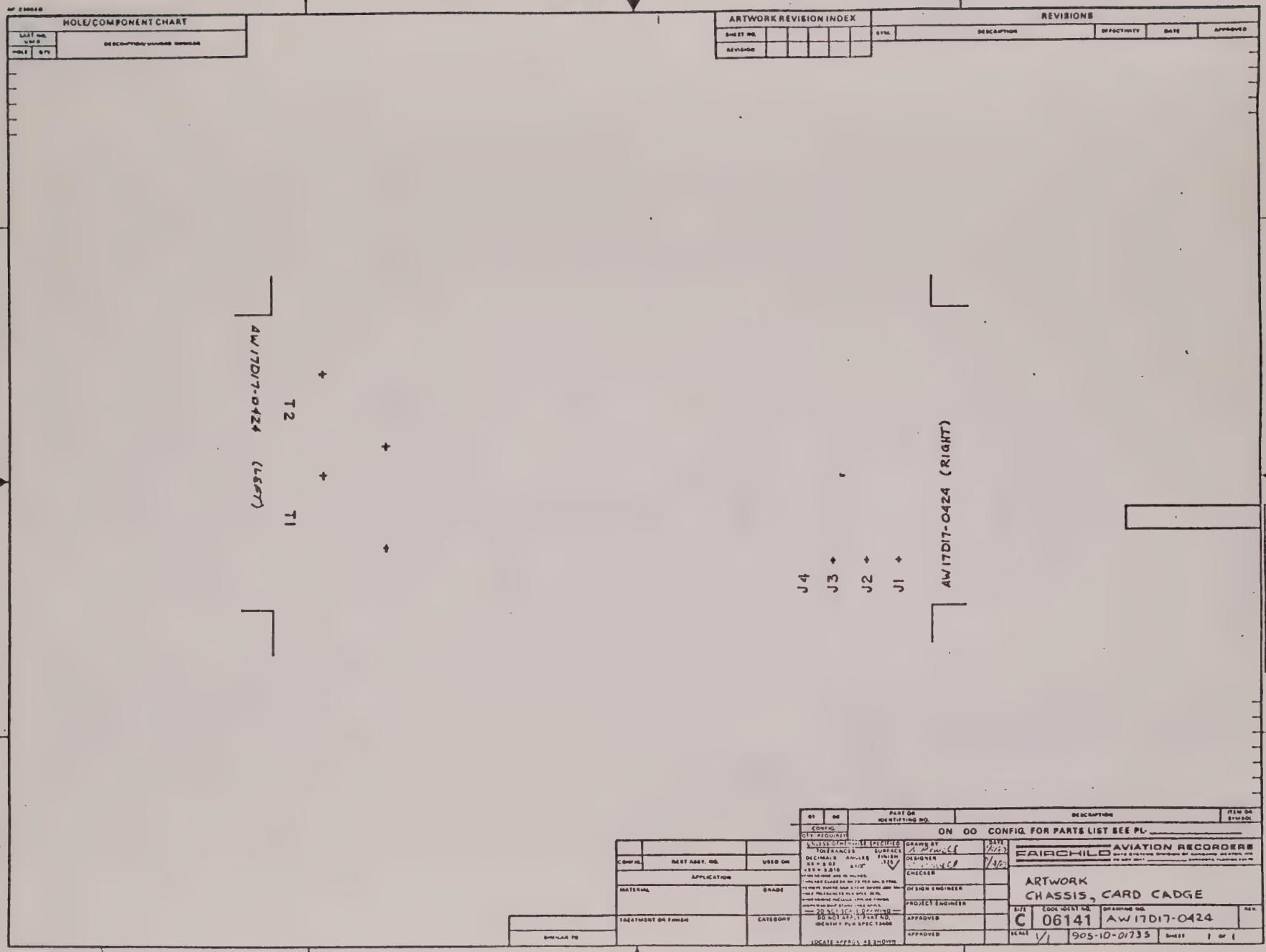
HOLE/COMPONENT CHART
ARTWORK REVISION INDEX
REVISIONS
AW17D17-0424 (LEFT)
T2
T1
AW17D17-0424 (RIGHT)
J4
J3
J2
J1
ON 00 CONFIG FOR PARTS LIST SEE PL
FAIRCHILD AVIATION RECORDERS
ARTWORK
CHASSIS, CARD CADGE
C
06141
AW17D17-0424
905-10-01733
SHEET 1 OF 1
FORM 3/2/1432

HOLE/COMPONENT CHART		
LETTER SIZE		DESCRIPTION UNLESS OTHERWISE
HOLE	QTY	
A	4	.128 DIA
B	1	1.312 DIA.
C	2	.125 DIA
D	4	.219 +.002 -.000 DIA. (FOR ITEM 2)

ARTWORK REVISION INDEX

REVISIONS

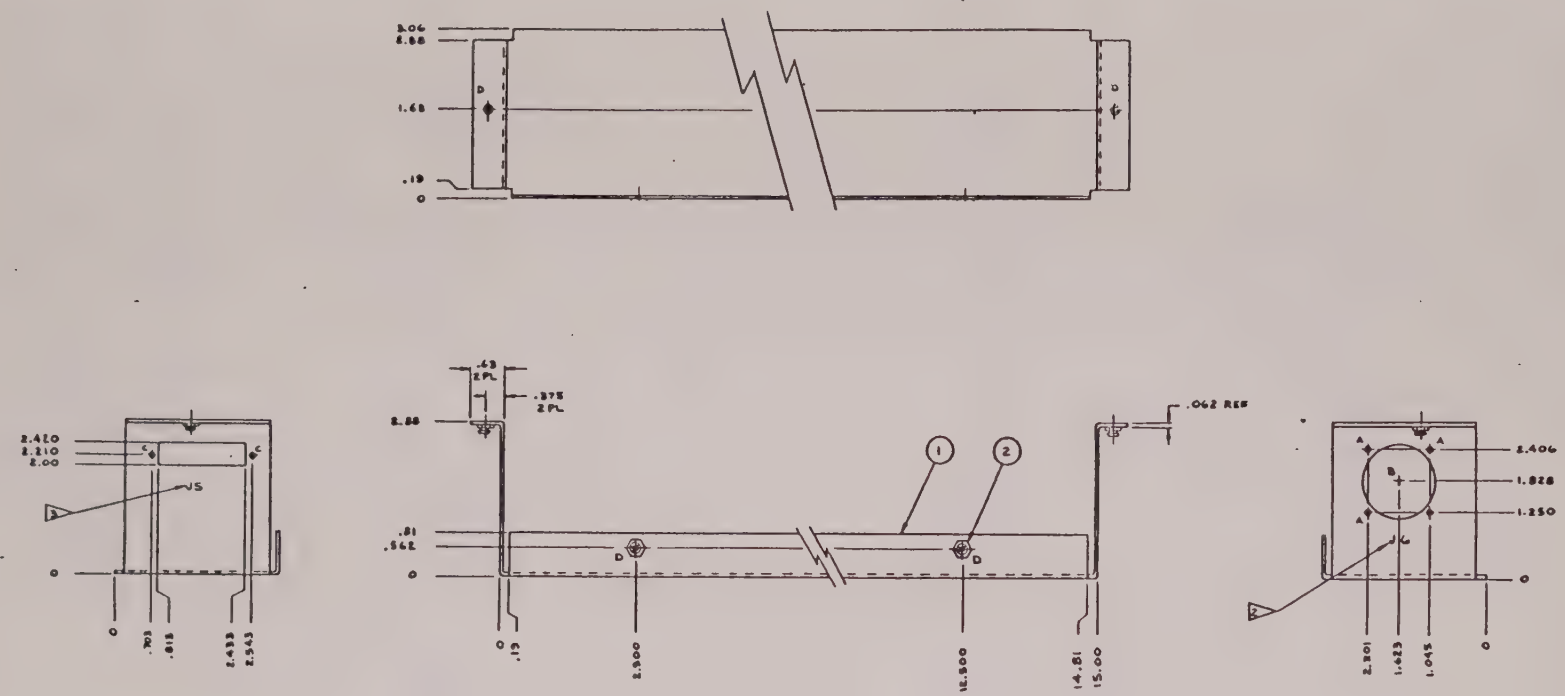

3 LETTER LEFT END (OUTSIDE SURFACE) OF CHASSIS PER SPEC 902401 AND AW 17D17-0423 (LEFT), STENCIL LETTERS, COLOR BLACK FED-STD 595 #27038.

2 LETTER RIGHT END (OUTSIDE SURFACE) OF CHASSIS PER SPEC 902401 AND AW 17D17-0423 (RIGHT), STENCIL LETTERS, COLOR BLACK FED-STD 595 #27038.

1 CLEAR ANODIZE PER SPEC 18405, PAINT INSIDE SURFACES PER SPEC 21412, COLOR BLACK NO. 4255.

NOTES:

00	17-A261	PDDU
CONFIG	NEXT ASSY NO	USED ON
APPLICATION		
MATERIAL SEE PARTS LIST .062 THK AL, 5052H-32		GRADE II
TREATMENT DIVISION 1		CATEGORY II

ON 00 CONFIG. FOR PARTS LIST SEE PL- 17D17-0423

FAIRCHILD AVIATION RECORDERS

CHASSIS, I/O

SIZE	CAGE CODE NO	DRAWING NO	REV
D	06141	17D17-0423	

FORM 2/2/1483

17D17-0423

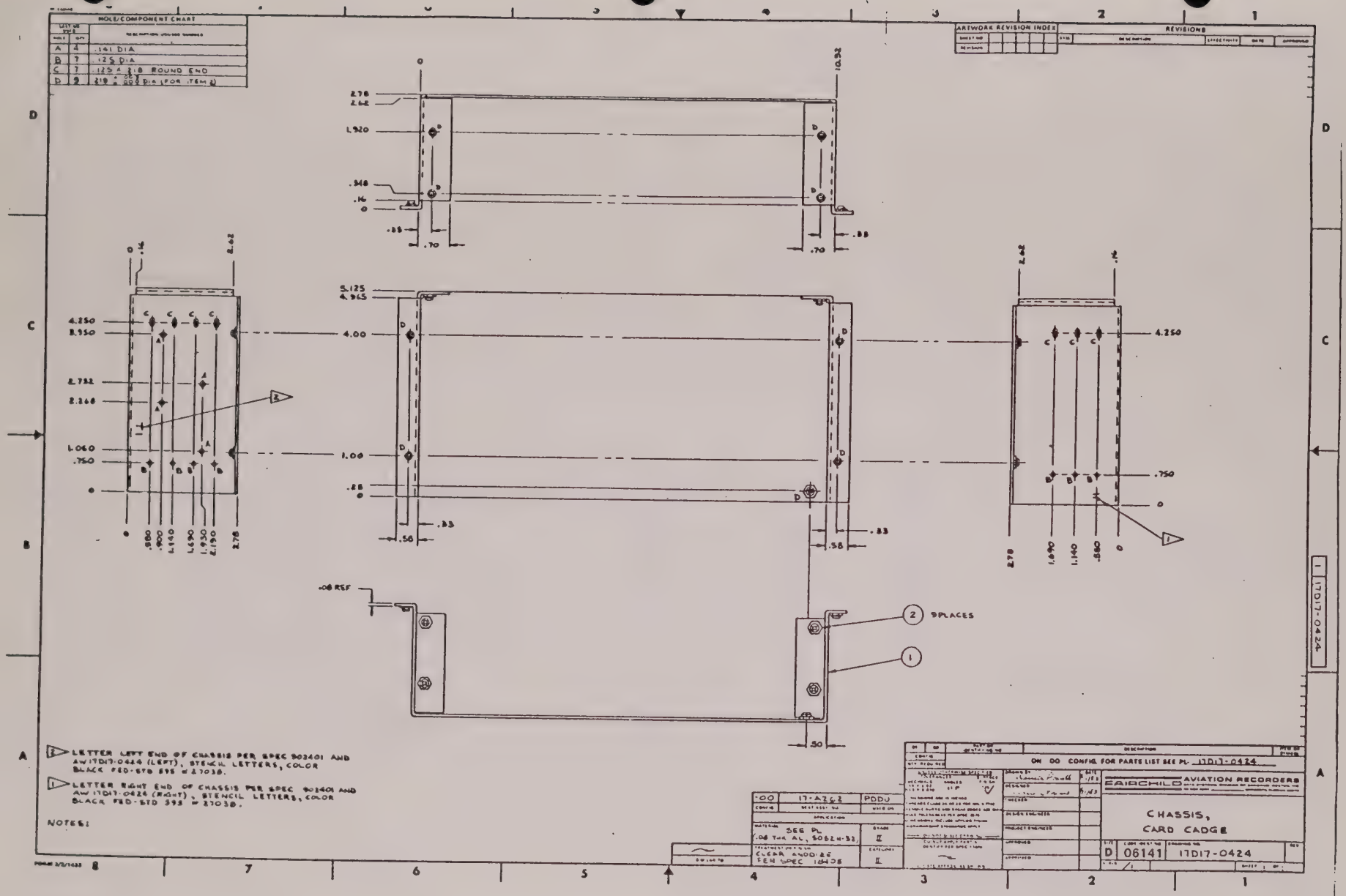
HOLE/COMPONENT CHART
A 4 .141 DIA
B 7 .125 DIA
C 7 .125 x .218 ROUND END
D 9 .219 DIA (FOR ITEM 2)
ARTWORK REVISION INDEX
REVISIONS
2.78
2.62
1.920
.348
.16
0
.33
.70
10.92
5.125
4.965
4.00
1.00
.28
.58
4.250
3.950
2.732
2.268
1.060
.750
.880
.900
1.140
1.690
1.930
2.190
.08 REF
9 PLACES
.50
LETTER LEFT END OF CHASSIS PER SPEC 902401 AND AW17D17-0424 (LEFT), STENCIL LETTERS, COLOR BLACK FED-STD 595 # 27038.
LETTER RIGHT END OF CHASSIS PER SPEC 902401 AND AW17D17-0424 (RIGHT), STENCIL LETTERS, COLOR BLACK FED-STD 595 # 27038.
NOTES:
.00 17-A262 PDDU
SEE PL .08 THK AL, 5052H-32
CLEAR ANODIZE PER SPEC 18405
ON DO CONFIG FOR PARTS LIST SEE PL 17D17-0424
FAIRCHILD AVIATION RECORDERS
CHASSIS, CARD CADGE
D 06141 17D17-0424
17D17-0424

HOLE/COMPONENT CHART		
LAST NO. USED		DESCRIPTION/UNUSED NUMBER
HOLE	QTY.	
A	5	.156 DIA.
B	8	.125 DIA.

ARTWORK REVISION INDEX					
SHEET NO.					
REVISION					

REVISIONS				
SYM.	DESCRIPTION	EFFECTIVITY	DATE	APPROVED

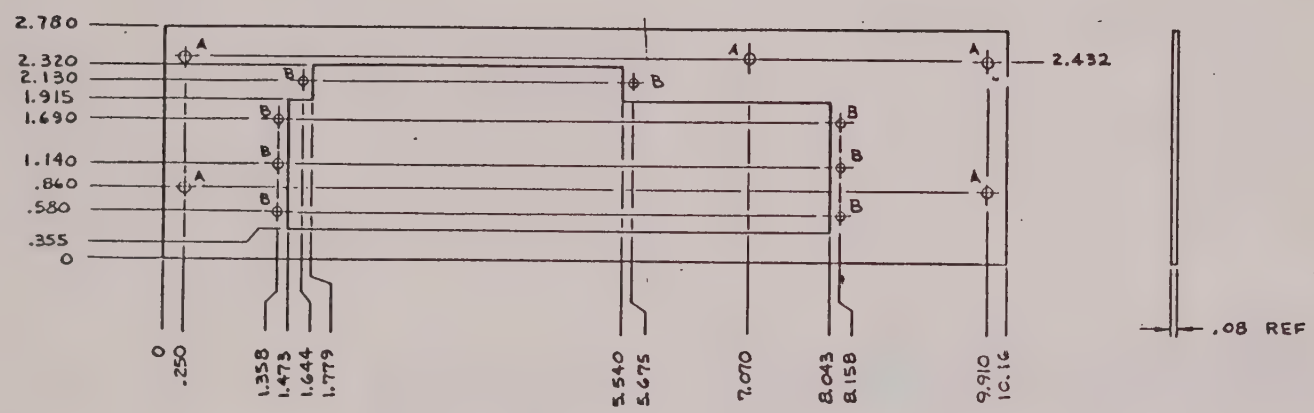

17D17-0426

-00	17-A262	PDDU	
CONFIG.	NEXT ASSY. NO.	USED ON	
APPLICATION			
MATERIAL SEE PL (.08 THK AL 5052H-34)		GRADE II	
TREATMENT OR FINISH CLEAR ANODIZE PER SPEC 18405		CATEGORY II	

SIMILAR TO

PART OR IDENTIFYING NO.	DESCRIPTION	ITEM OR SYMBOL
ON 00 CONFIG. FOR PARTS LIST SEE PL 17D17-0426		

UNLESS OTHERWISE SPECIFIED
TOLERANCES: DECIMALS .XX ± .03, .XXX ± .010; ANGLES ±1/2°; SURFACE FINISH .125
DO NOT SCALE DRAWING
DO NOT APPLY PART NO. IDENTIFY PER SPEC 13400
LOCATE APPROX. AS SHOWN

DRAWN BY: R. Powell
DESIGNER
CHECKER
DESIGN ENGINEER
PROJECT ENGINEER
APPROVED
APPROVED

FAIRCHILD AVIATION RECORDERS

PANEL, REAR
FOR CARD CHASSIS

SIZE	CODE IDENT NO.	DRAWING NO.	REV.
C	06141	17D17-0426	
SCALE 1/1		SHEET 1 OF 1	

FORM 3/2/1432

AF 23963A

HOLE/COMPONENT CHART		
LAST NO. USED		DESCRIPTION/UNUSED NUMBER
HOLE	QTY.	
A	1	.166X.70 ROUND END

ARTWORK REVISION INDEX					
SHEET NO.					
REVISION					

REVISIONS				
SYM.	DESCRIPTION	EFFECTIVITY	DATE	APPROVED

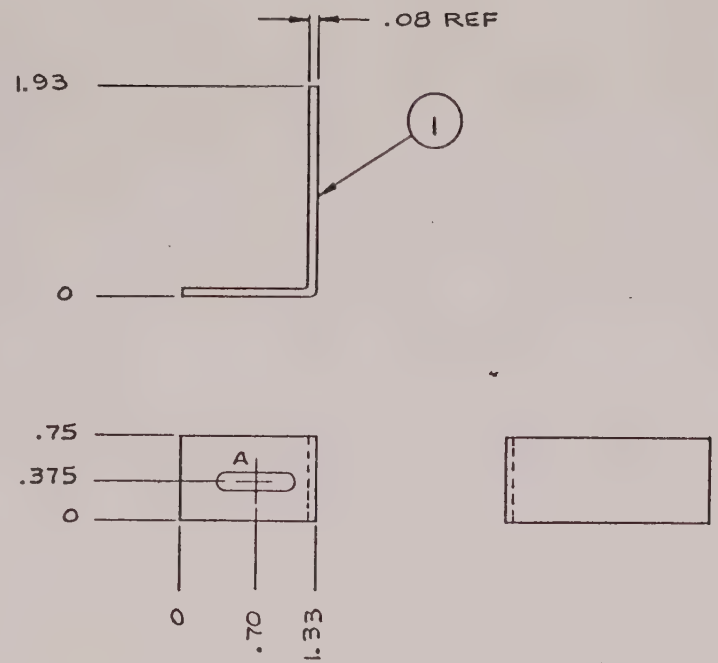

01	00	PART OR IDENTIFYING NO.	DESCRIPTION	ITEM OR SYMBOL
CONFIG.				
QTY. REQUIRED				

ON 00 CONFIG, FOR PARTS LIST SEE PL- 17D17-0428

-00	17-A.262	PDDU
CONFIG.	NEXT ASSY. NO.	USED ON
APPLICATION		
MATERIAL SEE PL (.08 THK AL, 5052H-32		GRADE II
TREATMENT OR FINISH CLEAR ANODIZE PER SPEC 18405		CATEGORY II

SIMILAR TO

UNLESS OTHERWISE SPECIFIED
TOLERANCES DECIMALS XX = ±.03 XXX = ±.010 ANGLES ±1/2° SURFACE FINISH .125
DIMENSIONS ARE IN INCHES.
THREADS CLASS 2A OR 2B PER MIL-S 7742.
REMOVE BURRS AND BREAK EDGES .030 MAX.
HOLE TOLERANCES PER SPEC 2675.
DIMENSIONS INCLUDE APPLIED FINISH.
WORKMANSHIP STANDARDS APPLY.
— DO NOT SCALE DRAWING —
DO NOT APPLY PART NO. IDENTIFY PER SPEC 13406
LOCATE APPROX. AS SHOWN

		DATE
DRAWN BY	D. Powell	7/28/83
DESIGNER		
CHECKER		
DESIGN ENGINEER		
PROJECT ENGINEER		
APPROVED		
APPROVED		

FAIRCHILD AVIATION RECORDERS
DATA SYSTEMS DIVISION OF SANDAMAC INDUSTRIES, INC.
PO BOX 3041 CARACOTA, FLORIDA 32670

CHASSIS, ADJUSTABLE CARD LOCK

SIZE	CODE IDENT NO.	DRAWING NO.	REV.
B	06141	17D17-0428	
SCALE 1/1		SHEET 1 OF 1	

1 17D17-0428

FORM 3/2/1431

17D17-0429

REVISIONS				
SYM.	DESCRIPTION	EFFECTIVITY	DATE	APPROVED

ARTWORK REVISION INDEX

SHEET NO.	REVISION

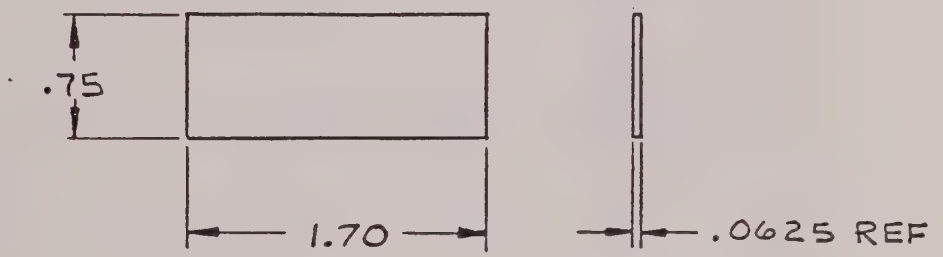

-00	17-A262	PDDU
CONFIG.	NEXT ASSY. NO.	USED ON
APPLICATION		
MATERIAL SEE PL	GRADE II	
TREATMENT OR FINISH	CATEGORY II	SIMILAR TO

FOR PARTS LIST SEE PL 17D17-0429

UNLESS OTHERWISE SPECIFIED
TOLERANCES: DECIMALS XX = ±.03, XXX = ±.010; ANGLES ±1/2°
SURFACE FINISH 125
DIMENSIONS ARE IN INCHES.
THREADS CLASS 2A OR 2B PER MIL-S-7742.
REMOVE BURRS AND BREAK EDGES .020 MAX
HOLE TOLERANCES PER SPEC. 2675.
DIMENSIONS INCLUDE APPLIED FINISH.
WORKMANSHIP STANDARDS APPLY.
— DO NOT SCALE DRAWING —

DO NOT APPLY PART NO.
IDENTIFY PER SPEC 13406

		DATE
DRAWN BY	A. Powell	7/28/83
DESIGNER		
CHECKER		
DESIGN ENGINEER		
PROJECT ENGINEER		
APPROVED		
APPROVED		

FAIRCHILD AVIATION RECORDERS
DATA SYSTEMS DIVISION OF SANDAMO WESTON, INC
PO BOX 3041 SARASOTA FLORIDA 33578

PAD, BUMPER

SIZE	CODE IDENT NO.	DRAWING NO.	REV.
A	06141	17D17-0429	

SCALE

AP 23963A

HOLE/COMPONENT CHART		
LAST NO. USED		DESCRIPTION/UNUSED NUMBER
HOLE	QTY.	
A	1	.125 DIA
B	1	.125 X .218 ROUND END
C	3	.222 $^{+.003}_{-.000}$ DIA (FOR ITEM 2)

ARTWORK REVISION INDEX					
SHEET NO.					
REVISION					

REVISIONS				
SYM.	DESCRIPTION	EFFECTIVITY	DATE	APPROVED

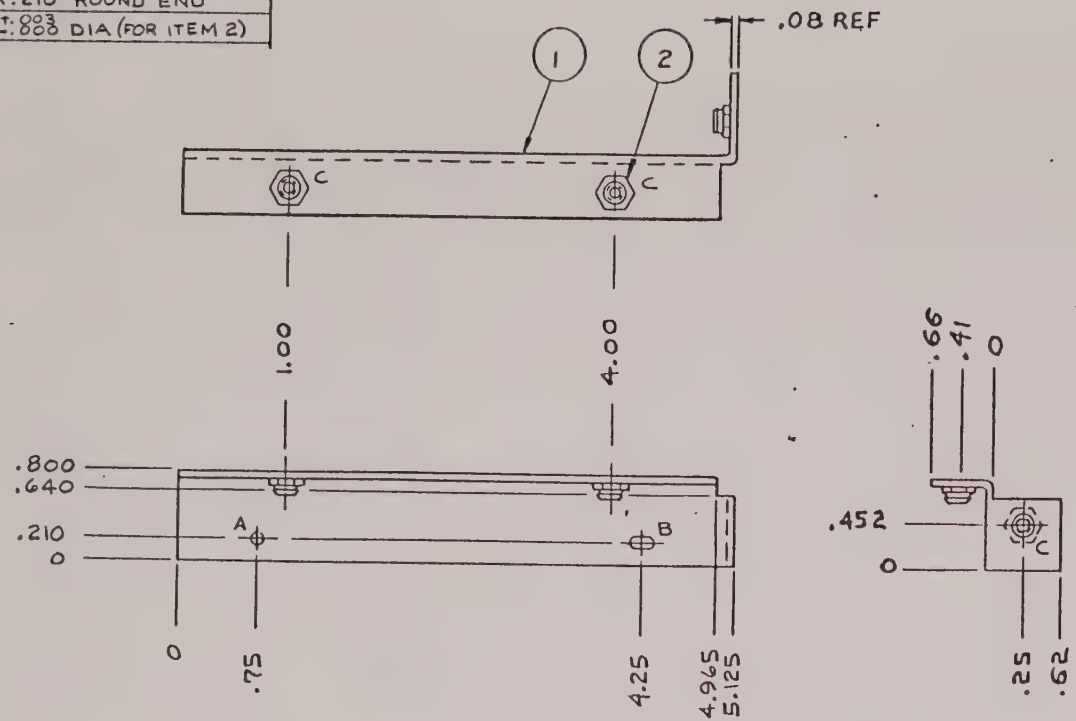

01	00	PART OR IDENTIFYING NO.	DESCRIPTION	ITEM OR SYMBOL
CONFIG.				
QTY. REQUIRED				

ON 00 CONFIG. FOR PARTS LIST SEE PL- 17D17-0427

-00	17-A262	PDDU
CONFIG.	NEXT ASSY. NO.	USED ON

APPLICATION

MATERIAL	GRADE
SEE PL (.08THK AL, 5052H-32	II

TREATMENT OR FINISH	CATEGORY
CLEAR ANODIZE PER SPEC 18405	II

SIMILAR TO

UNLESS OTHERWISE SPECIFIED
TOLERANCES DECIMALS XX = ±.03 XXX = ±.010 ANGLES ±1/2° SURFACE FINISH .125
DIMENSIONS ARE IN INCHES.
THREADS CLASS 2A OR 2B PER MIL-S-7742.
REMOVE BURRS AND BREAK EDGES .020 MAX.
HOLE TOLERANCES PER SPEC 2679.
DIMENSIONS INCLUDE APPLIED FINISH.
WORKMANSHIP STANDARDS APPLY.
— DO NOT SCALE DRAWING —
DO NOT APPLY PART NO. IDENTIFY PER SPEC 13406
LOCATE APPROX. AS SHOWN

		DATE
DRAWN BY	S. Powell	7/4/83
DESIGNER		
CHECKER		
DESIGN ENGINEER		
PROJECT ENGINEER		
APPROVED		
APPROVED		

FAIRCHILD AVIATION RECORDERS
DATA SYSTEMS DIVISION OF SANDAMO WESTON, INC
PO BOX 1841, SARASOTA, FLORIDA 33578

CHASSIS, CARD BRACKET

SIZE	CODE IDENT NO.	DRAWING NO.	REV.
B	06141	17D17-0427	

SCALE 1/1 SHEET 1 OF 1

FORM 3/2/1431

1 17D17-0427

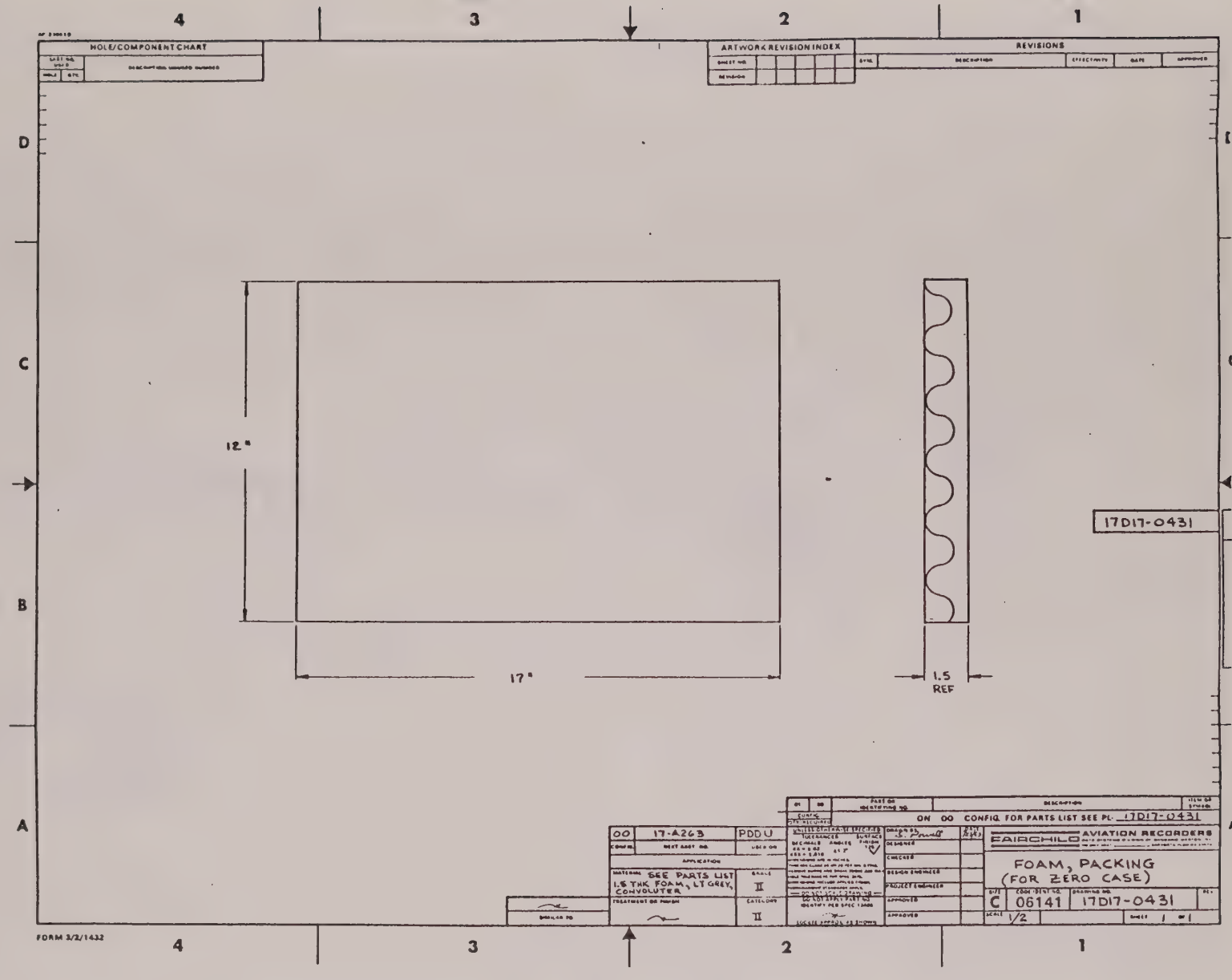
HOLE/COMPONENT CHART
ARTWORK REVISION INDEX
REVISIONS
12"
17"
1.5
REF
17D17-0431
ON 00 CONFIG FOR PARTS LIST SEE PL 17D17-0431
00
17-A263
PDDU
SEE PARTS LIST
1.5 THK FOAM, LT GREY, CONVOLUTED
II
II
FAIRCHILD AVIATION RECORDERS
FOAM, PACKING
(FOR ZERO CASE)
C
06141
17D17-0431
1/2
FORM 3/2/1432

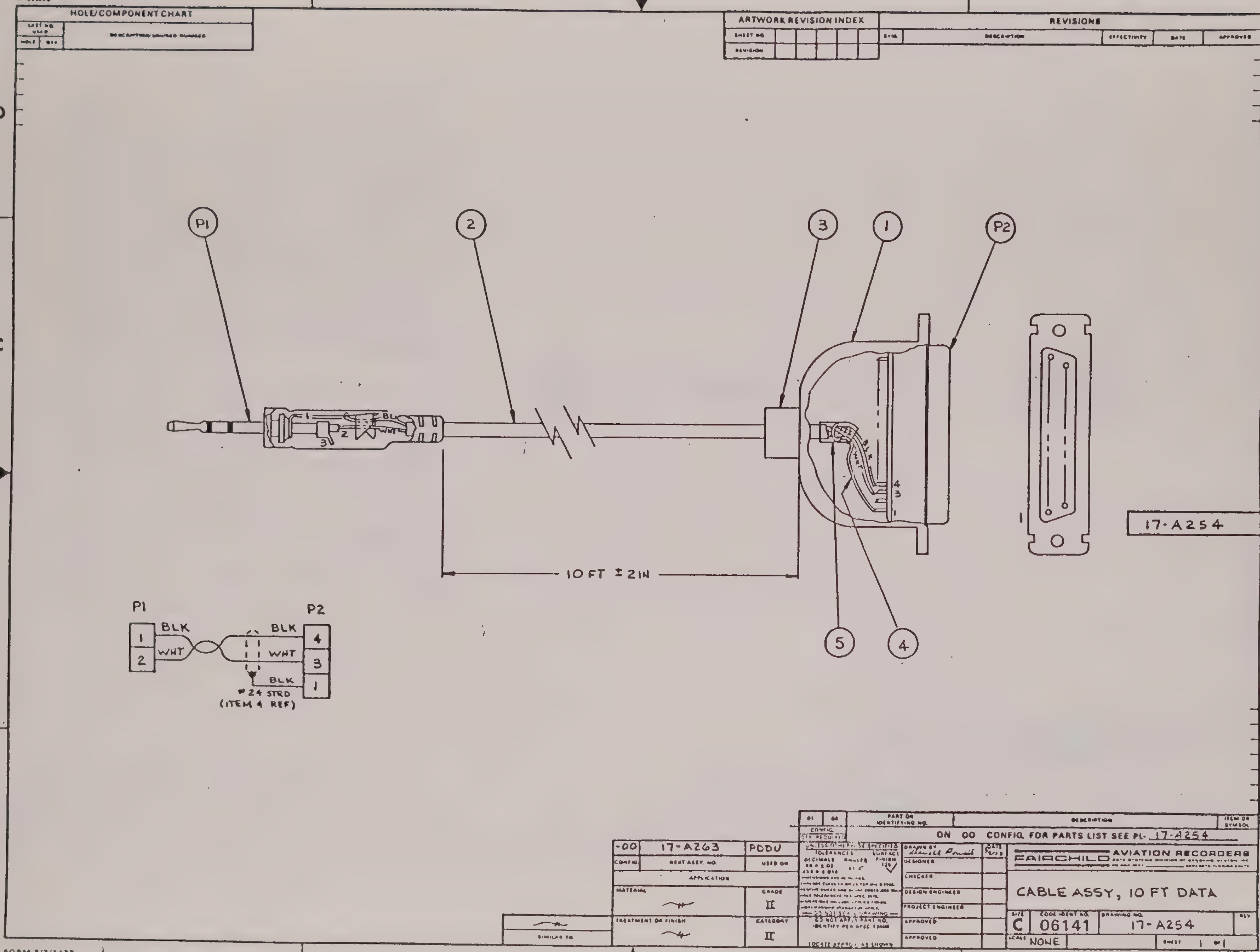

HOLE/COMPONENT CHART
ARTWORK REVISION INDEX
REVISIONS
P1
2
3
1
P2
5
4
BLK
WHT
10 FT ± 2 IN
17-A254
P1
P2
BLK
WHT
BLK
WHT
BLK
#24 STRD
(ITEM 4 REF)
ON 00 CONFIG. FOR PARTS LIST SEE PL- 17-A254
-00
17-A263
PDDU
NEXT ASSY. NO.
USED ON
APPLICATION
MATERIAL
TREATMENT OR FINISH
GRADE
II
CATEGORY
II
SIMILAR TO
DRAWN BY
DESIGNER
CHECKER
DESIGN ENGINEER
PROJECT ENGINEER
APPROVED
APPROVED
FAIRCHILD AVIATION RECORDERS
CABLE ASSY, 10 FT DATA
SIZE C
CODE IDENT NO. 06141
DRAWING NO. 17-A254
SCALE NONE
SHEET 1 of 1
FORM 3/2/1432

HOLE/COMPONENT CHART

ARTWORK REVISION INDEX

REVISIONS

WIRING DIAGRAM

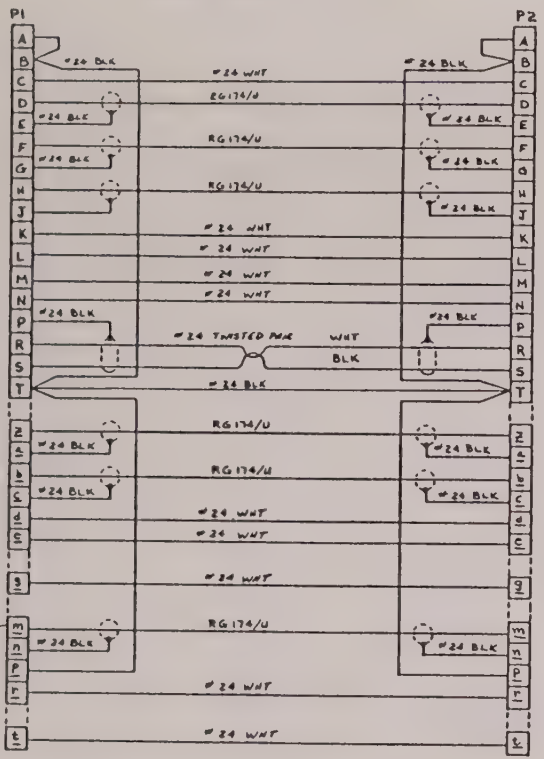

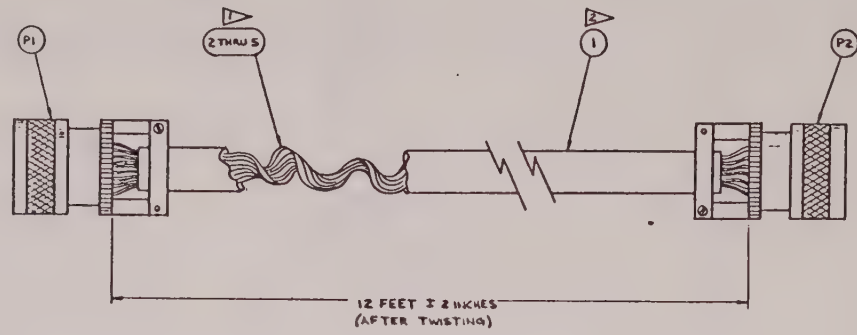

1. SECURELY CLAMP SLEEVING (ITEM 1) AT P1 & P2.
2. BEFORE INSTALLING SLEEVING (ITEM 1), TWIST CABLE APPROX. 1 TURN PER FOOT.

NOTES:

ON DO CONFIG FOR PARTS LIST SEE PL 17-A264

-00	17-TE165	PDDU

FAIRCHILD AVIATION RECORDERS

CABLE ASSY
PDDU TO DFR, 12 FT LG

D 06141 17-A264

17-A264

HOLE/COMPONENT CHART

ARTWORK REVISION INDEX

REVISIONS

THIS DWG. WAS C.A.D.D.S GENERATED

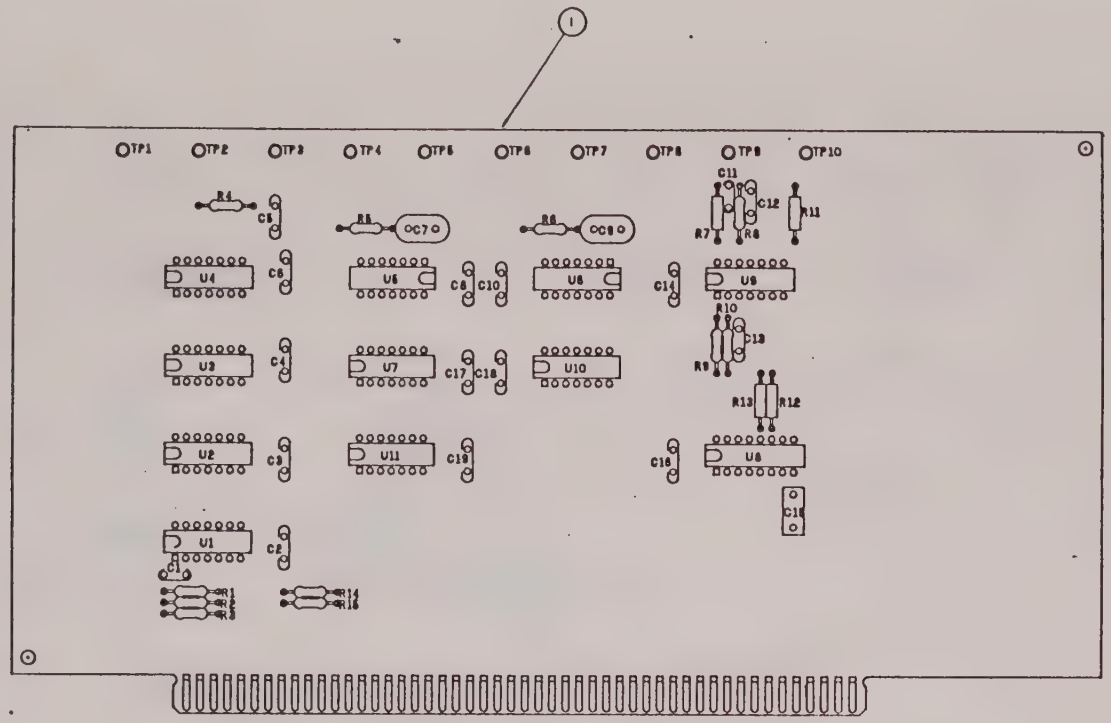

ON 00 CONFIG. FOR PARTS LIST SEE PL-17-A256

J. BOARDMAN 2-15-82

D. HARMES 2-15-82

PWA, 673 BIT SYNC

D 06141 17-A256

00 17TE-120 RCU

1. MAX. ASSY. HEIGHT: A. COMPONENT SIDE: .60
B. NONCOMPONENT SIDE: .09

UNLESS OTHERWISE SPECIFIED:

NOTES:

HOLE/COMPONENT CHART

ARTWORK REVISION INDEX

REVISIONS

THIS DWG. WAS C.A.D.D.S GENERATED

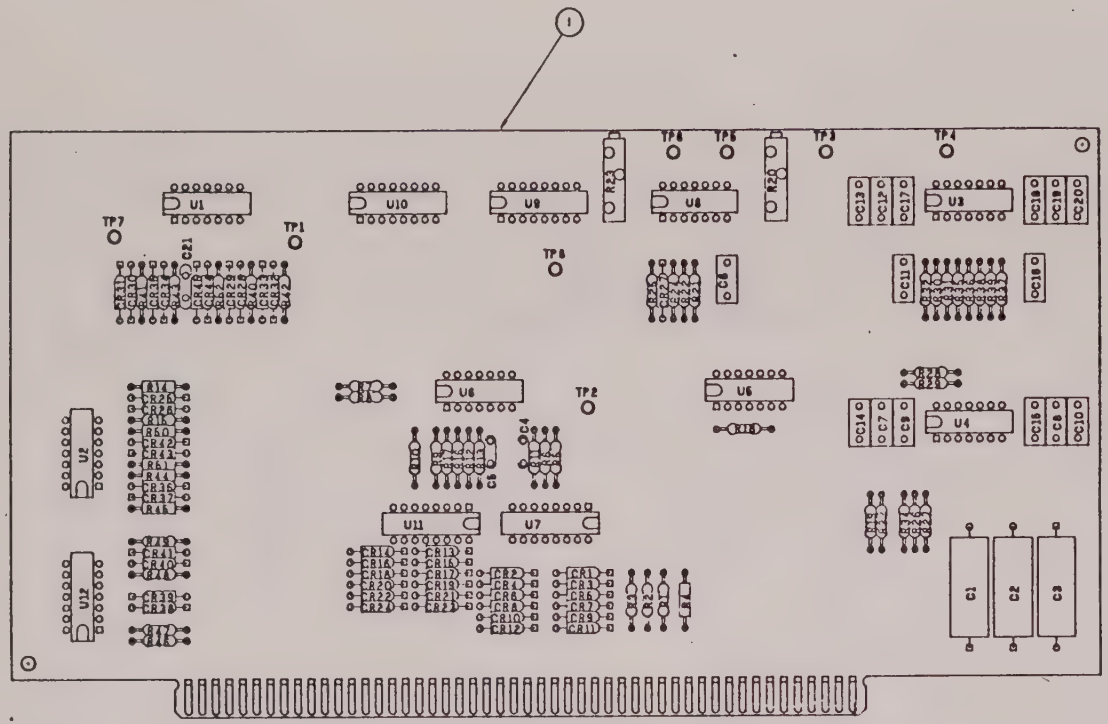

3. □ SQUARE PAD INDICATES (+) POSITIVE END OF CAPACITORS, CATHODE END OF DIODES AND MECHANICAL ORIENTATION OF SYMMETRICAL MULTI-LEADED DEVICES.

1. MAX. ASSY. HEIGHT: A. COMPONENT SIDE: .60
B. NONCOMPONENT SIDE: .09

UNLESS OTHERWISE SPECIFIED:

NOTES:

ON 00 CONFIG. FOR PARTS LIST SEE PL-17-A257

PWA, READ AMP

D 06141 | 17-A257

HOLE/COMPONENT CHART

ARTWORK REVISION INDEX

REVISIONS

A	ECO#0600215 [illegible] DWG. NO. 17-A258	4-4-83	3-11-83
B	ECO# 0600299 [illegible] -01 & NOTE 3	8-22-83	8-25-83
-	THIS DWG. WAS C.A.D.D.S GENERATED	-	-

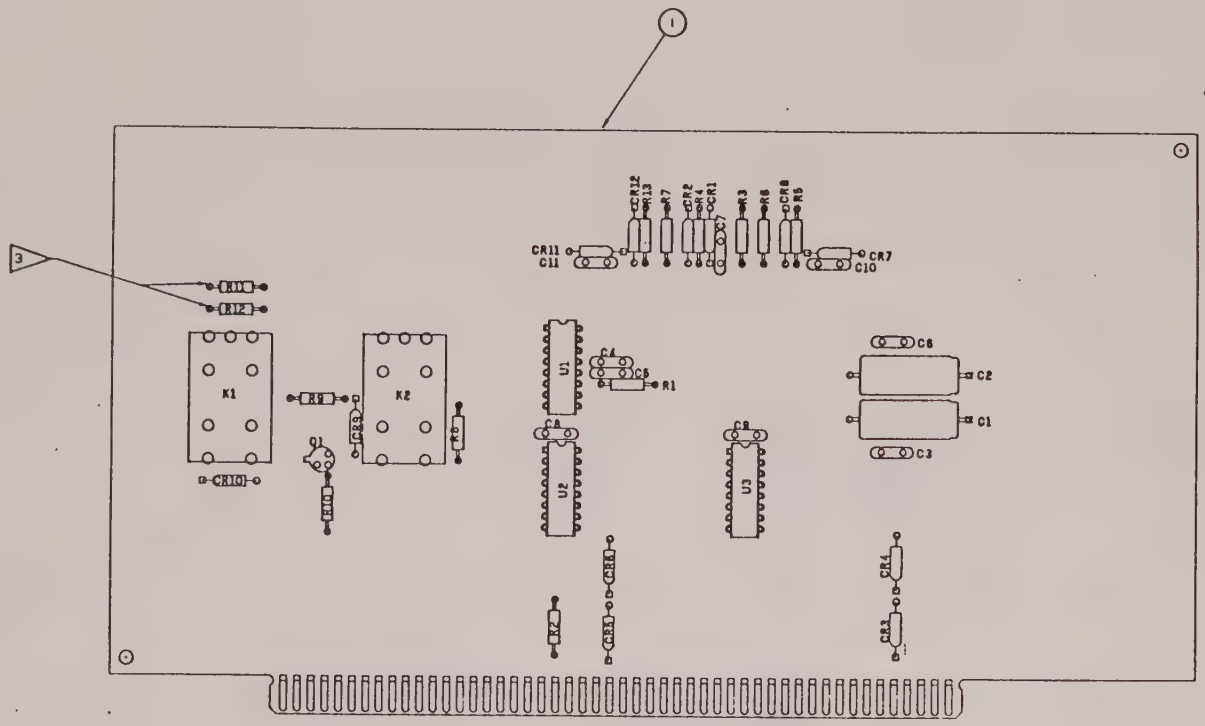

3 ON -01 CONFIGURATION, R11 AND R12 ARE REPLACED BY #26 AWG SOLID WIRE (STOCK CONTROL NO. 276-02-000491).

2. □ SQUARE PAD INDICATES (+) POSITIVE END OF CAPACITORS, CATHODE END OF DIODES AND MECHANICAL ORIENTATION OF SYMMETRICAL MULTI-LEADED DEVICES.

1. MAX. ASSY. HEIGHT: A. COMPONENT SIDE :.70
B. NONCOMPONENT SIDE :.09

UNLESS OTHERWISE SPECIFIED:

NOTES:

01	17-TE165	PCCU
00	17-TE120	RDU

17-A258-01	FOR PARTS LIST SEE PL 17-A258-01
17-A258	FOR PARTS LIST SEE PL 17-A258

ON 00 CONFIG. FOR PARTS LIST SEE PL-

J.BOARDMAN

D.HARMAS

RON BASHAM AB

C. JONES

R.RAMEY

PWA. CONTROL INTERFACE

D 06141 17-A258 B

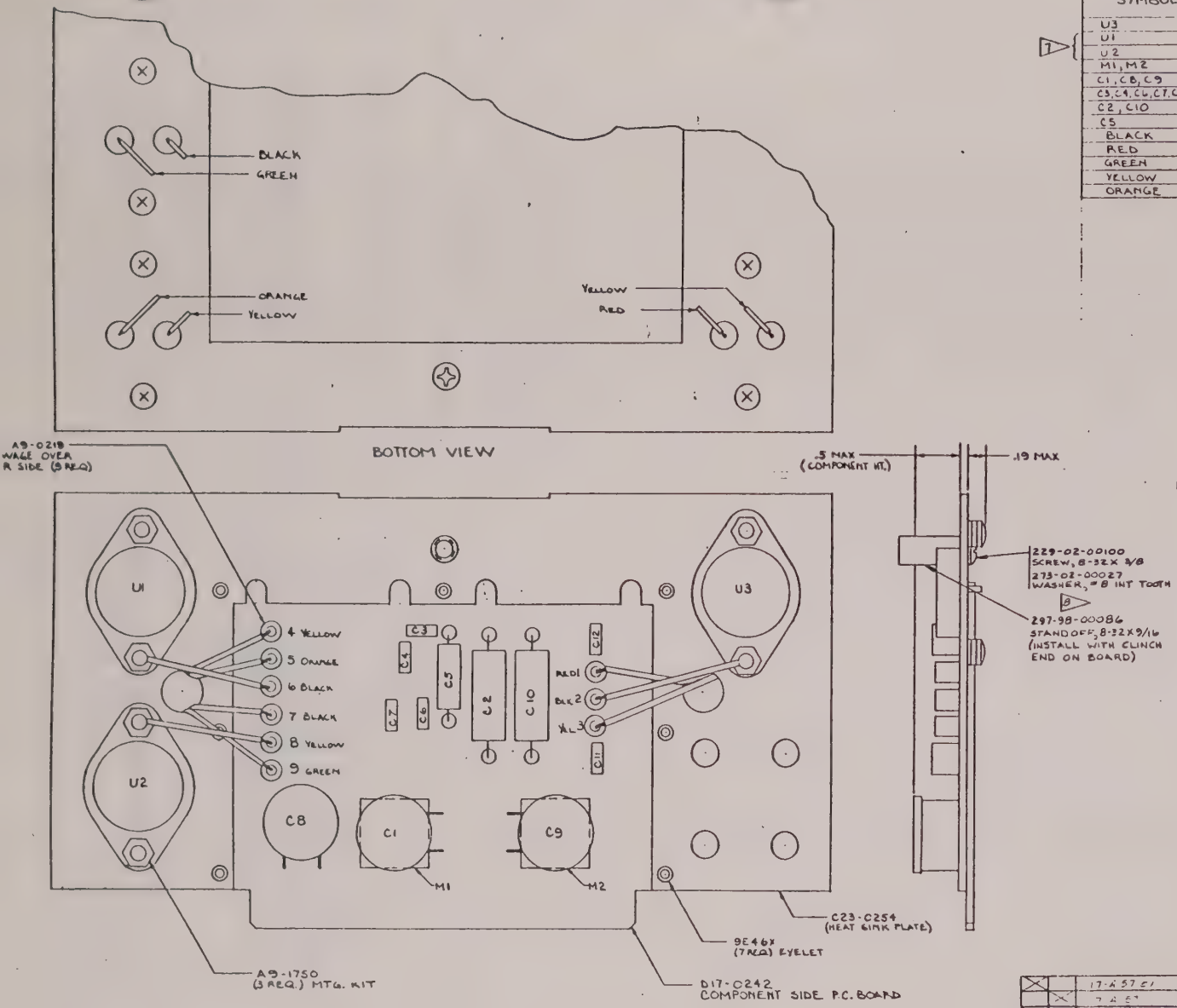

SYMBOL	DISCRIPTION		/NUMBER
U3	VOLTAGE REG.	+5 V	9391771 (μA78H05SMGB
U1		+12 V	9391640 (μA78H12KMGB.
U2		-12 V	9391864 (μA79H12KMGB
M1, M2	BRIDGE		9391863 (8191-20M)
C1, C8, C9	CAPACITORS	(.01μf, 1KV)	9391769
C3, C4, C6, C7, C11, C12		(.33μf, 50V)	9391646
C2, C10		(470μf, 30V)	9391765
C5		(150μf, 30V)	9391767
BLACK	BUS WIRE	(20AWG)	9391791-02
RED			9391791-03
GREEN			9391791-04
YELLOW			9391791-05
ORANGE			9391791-08

NOTES:

1. ALL COMPONENTS MUST BE SECURED MECHANICALLY BEFORE SOLDERING.
2. ALL GOLD CONNECTOR CONTACTS (FINGERS) MUST BE FREE OF CONTAMINATION.
3. SOLDER SIDE OF THE BOARD MUST BE TRIMMED TO .125 MAX.
4. TESTING.
   A. FUNCTION TEST
   B. BURN-IN FOR 100 HRS. AT 60° C. ± 5° C.
   C. FUNCTION TEST AGAIN
5. BEND C1 & C9 OVER AND BOND TO M1 & M2 USING ITEM 11.
6. BOND C2, C5, C8 & C10 TO BOARD USING ITEM 11.

D17-A157

7 ON -01 CONFIG, U1 IS A +15V VOLTAGE REGULATOR (STOCK CONTROL NO. 046-97-00956) AND U2 IS A -15V VOLTAGE REGULATOR (STOCK CONTROL NO. 046-97-00957).

8 STANDOFF (297-98-00086), SCREW (229-02-00100), AND WASHER (273-02-00027) ARE USED ON -01 CONFIG ONLY.

FOR SCD., SEE DWG C17-SCD009

X		17-A157-01	FOR PARTS LIST SEE PL 17-A157-01
	X	17-A157	FOR PARTS LIST SEE PL 17-A157
01	00	PART OR IDENTIFYING NO	DESCRIPTION

ON 00 CONFIG FOR PARTS LIST SEE PL

01	17-A263	FDDJ

REVISIONS

APPLICATION

POWER SUPPLY BRD ASSY

FAIRCHILD

17D17-0435

REVISIONS				
SYM.	DESCRIPTION	EFFECTIVITY	DATE	APPROVED

ARTWORK REVISION INDEX	
SHEET NO.	REVISION

-00	17-A2163	PDDU
CONFIG.	NEXT ASSY. NO.	USED ON

APPLICATION	
MATERIAL	GRADE
—	II
TREATMENT OR FINISH	CATEGORY
—	II

—
SIMILAR TO

FOR PARTS LIST SEE PL- —

UNLESS OTHERWISE SPECIFIED
TOLERANCES
DECIMALS XX = ±.03 XXX = ±.010
ANGLES ±1/2°
SURFACE FINISH .125 ✓
DIMENSIONS ARE IN INCHES.
THREADS CLASS 2A OR 2B PER MIL-S-7742.
REMOVE BURRS AND BREAK EDGES .020 MAX.
HOLE TOLERANCES PER SPEC. 2575.
DIMENSIONS INCLUDE APPLIED FINISH.
WORKMANSHIP STANDARDS APPLY.
— DO NOT SCALE DRAWING —

DO NOT APPLY PART NO.
IDENTIFY PER SPEC 13406
—
LOCATE APPROX. AS SHOWN

		DATE
DRAWN BY	[illegible]	[illegible]
DESIGNER		
CHECKER		
DESIGN ENGINEER		
PROJECT ENGINEER		
APPROVED		
APPROVED		

FAIRCHILD WESTON
Schlumberger

FAIRCHILD WESTON SYSTEMS, INC.
DATA SYSTEMS DIVISION
P.O. BOX 3041
SARASOTA, FLORIDA 33578

WIRE LIST, PDDU

SIZE	CODE IDENT NO.	DRAWING NO.	REV.
A	06141	17D17-0435	

SCALE — SHEET 1 OF

FORM 3/2/31 G

I.O

FROM	TO	WIRE	DESCRIPTION
J6-A	J6-T	#24 AWG, STRD. BLK	276-98-00093
J6-T	J6-j	#24 AWG, STRD, BLK	276-98-00093
J6-j	J6-P	#24 AWG, STRD, BLK	276-98-00093
J6-P	$2C-6		276-98-00093
J6-b	J2-b	#26 AWG, SOLID SHIELDED	WHITE
J6-c	J2-m	276-02-00098	SHIELD
J6-e	$2B-1	#24 AWG, STRD, WHT	276-98-00102
J6-g	$2C-1	#24 AWG, STRD, WHT	276-98-00102
J6-m	J2-X	#26 AWG, SOLID SHIELDED	WHITE
J6-n	J2-f	276-02-00098	SHIELD
J6-t	$2A-1	#24 AWG, STRD, WHT	276-98-00102
J6-z	J2-z	#26 AWG SOLID SHIELDED	WHITE
J6-a	J2-K	276-02-00098	SHIELD
J6-r	$7-C2	#24 AWG, STRD, WHT	276-98-00102
J6-d	$1-NO1	#24 AWG, STR, WHT	276-98-00102

SIZE	CODE IDENT NO.	DRAWING NO.	REV.
A	06141	17017-0435	
SCALE		SHEET 2	

FORM 3/2/1103A

I/O CONTINUED

FROM	TO	WIRE	DESCRIPTION
J6-L	$E-C$	#24 AWG, STRD, WHT	276-98-00102
J6-C	J3-33	#26 AWG, SOLID, WHT	276-02-00049
J6-D	J2-Y	#26 AWG, SOLID SHIELDED	WHITE
J6-E	J2-11	276-02-00098	SHIELD
J6-F	J2-a	#26 AWG SOLID SHIELDED	WHITE
J6-G	J2-L	276-02-00098	SHIELD
J6-H	J2-C	#26 AWG SOLID SHIELDED	WHITE
J6-J	J2-11	276-02-00098	SHIELD
J6-K	J3-32	#26 AWG, SOLID, WHT	276-02-00049
J6-M	J3-Z	#26 AWG, SOLID, WHT	276-02-00049
J6-N	J1-V	#26 AWG, SOLID, WHT	276-02-00049
J6-R	T1-1	#24 AWG, STRD	WHITE
J6-S	T1-2	TWIST PAIR, SHIELDED	BLACK
J6-P	TERMINATE SHIELD AT T1, NOT CONNECTED TO T1	276-02-00267	SHIELD
J6-P	CHASSIS GND LUG	#24 AWG, STRD, BLK 276-98-00093	PIG TAIL

SIZE	CODE IDENT NO.	DRAWING NO.	REV.
A	06141	17D17-0435	
SCALE		SHEET 3	

FORM 3/2/1103A

I/O CONTINUED

FROM	TO	WIRE	DESCRIPTION
J5-1	J3-AF	#26 AWG, SOLID, WHT	276-02-00049
J5-2	J3-13		
J5-3	J2-36		
J5-4	J2-34		
J5-5	J2-32		
J5-6	J2-30		
J5-10	J2-31		
J5-11	J2-40		
J5-12	J2-44		
J5-13	J2-43		
J5-14	J2-29		
J5-15	J2-28		
J5-17	J2-25	#26 AWG, SOLID, WHT	276-02-00049

SIZE	CODE IDENT NO.	DRAWING NO.	REV.
A	06141	17D17-0435	
SCALE		SHEET 4	

FORM 3/2/1103A

I/O CONTINUED

FROM	TO	WIRE	DESCRIPTION
J5-18	J2-31	#26 AWG, SOLID, WHT	276-02-00049
J5-22	J2-37		
J5-23	J2-36		
J5-24	J2-42		
J5-25	J2-41	#26 AWG, SOLID, WHT	276-02-00049

SIZE	CODE IDENT NO.	DRAWING NO.	REV.
A	06141	17D17-0435	
SCALE		SHEET 5	

FORM 3/2/1103A

CARD CAGE

FROM	TO	WIRE	DESCRIPTION
J1-A	J1-1 (+5V)	#20 AWG, SOLID, WHT	276-02-00029
J1-1	J2-A		
J2-A	J2-1		
J2-1	J3-A		
J3-A	J3-1		
J3-1	J4-R		
J4-R	J4-$\not$		
J4-N	T1-3 (PWR)		
J4-M	T1-5		
J4-D	T1-1		
J4-E	T1-2		
J4-U	T2-3		
J4-V	T2-5	#20 AWG, SOLID, WHT	276-02-00029

SIZE	CODE IDENT NO.	DRAWING NO.	REV.
A	06141	17D17-0435	
SCALE		SHEET 6	

FORM 3/2/1103A

CARD CAGE CONTINUED

FROM	TO	WIRE	DESCRIPTION
T2-1	T1-1 (PWR.)	#20 AWG, SOLID, WHT	276-02-00029
T2-2	T1-2		
J1-B	J2-B (+15V)		
J2-B	J3-B		
J3-B	J4-J		
J4-J	J4-K		
J1-C	J2-C (-15V)		
J2-C	J3-C		
J3-C	J4-H		
J4-H	J4-B		
J1-AF	J1-50 (GND)		
J1-50	J2-AF	#20 AWG, SOLID WHT	276-02-00044

SIZE	CODE IDENT NO.	DRAWING NO.	REV.
A	06141	17D17-0435	
SCALE		SHEET 7	

FORM 3/2/1103A

WIRE TABLE CONTINUED

FROM	TO	WIRE	DESCRIPTION
J2-AF	J2-5C (GND)	#20 AWG, SOLID, WHT	276-02-00029
J2-5C	J3-AF		
J3-AF	J3-5C		
J3-5C	J4-W		
J4-W	J4-X		
J4-X	J4-Y		
J4-Y	J4-Z		
J4-Z	T1-4		
J4-N	GND LUG	#20 AWG, SOLID, WHT	276-02-00029
J1-38	J2-J	#26 AWG, SOLID, WHT	276-02-00049
J1-39	J2-K		
J1-40	J2-M		
J1-41	J2-E	#26 AWG, SOLID, WHT	276-02-00049

SIZE	CODE IDENT NO.	DRAWING NO.	REV.
A	06141	17D17-0435	
SCALE		SHEET 8	

FORM 3/2/1103A

CONTROL

FROM	TO	WIRE	DESCRIPTION
$3-1	J3-1	#26 AWG, SOLID, WHT	276-02-00049
$3-2	J2-R		
$6-1	J3-17		
$2A-2	$2A-3		
$2A-3	$2A-4		
$2A-4	$2A-5		
$2A-5	$2B-2		
$2B-2	$2B-3		
$2B-3	$2B-6		
$2B-6	$2B-7		
$2B-7	$2C-2		
$2C-3	$2C-4		
		✓	✓
$2C-4	$2D-6	#26 AWG, SOLID, WHT	276-02-00049

SIZE	CODE IDENT NO.	DRAWING NO.	REV.
A	06141	17017-0435	
SCALE		SHEET 10	

FORM 3/2/1103A

CONTROL CONTINUED

FROM	TO	WIRE	DESCRIPTION
$2A-C	J2-11	#26 AWG, SOLID, WHT	276-02-00049
$2A-1	J3-D		
$2B-C	J2-T		
$2B-1	J3-A		
$2C-C	J2-F		
$2C-1	J3-K		
$5-NO1	$3-3		
$5-NO1	$1-C1		
$5-NO1	$7-NO2		
$5-C1	J3-E		
$4-C1	J3-M		
$4-NO1	J3-14		
		✓	✓
$8-NO1	$7-NO2	#26 AWG, SOLID, WHT	276-02-00049

SIZE	CODE IDENT NO.	DRAWING NO.	REV.
A	06141	17017-0435	
SCALE		SHEET 11	

FORM 3/2/1103A

CONTROL CONTINUED

FROM	TO	WIRE	DESCRIPTION
$6-NC1	J3-34	#26 AWG, SOLID, WHT	276-02-00049
$7-NO2	$7-NC1	RES. 100Ω (R1)	616-02-10009
$7-NC1	$7-C2	CAP, 1μF (C1)	301-13-10003
DL1-2	DL2-2	#26AWG SOLID, WHT	276-02-00049
		↓	↓
DL1-2	$3-1		
DL2-2	$3-C2		
		↓	↓
DL3-1	$3-NC1	#26 AWG, SOLID, WHT	276-02-00049
TP1	J2-13	#22 AWG, STRD, RED	276-98-00074
TP2	J2-50	#22 AWG, STRD, BLK	276-98-00072
DY1-3	DY1-14	#26 AWG, SOLID, WHT	276-02-00049
		↓	↓
DY1-1	J3-21		
DY1-2	J3-49		
		↓	↓
DY1-3	J3-5	#26 AWG, SOLID, WHT	276-02-00049

SIZE	CODE IDENT NO.	DRAWING NO.	REV.
A	06141	17D17-0435	
SCALE		SHEET 12	

FORM 3/2/1103A

CONTROL CONTINUED

FROM	TO	WIRE	DESCRIPTION
DY1-7	J3-25	#26 AWG, SOLID, WHT	276-02-00049
DY1-8	J3-24		
DY1-10	J3-23		
DY1-11	J3-4		
DY1-13	J3-22	#26 AWG, SOLID, WHT	276-02-00049
S1-C1	J3-20	#22 AWG, STRD BLK	276-96-00072
S5-NC2	DL1-1	RES 150Ω (R2) *	616-02-15009
S5-NC2	J3-9A	#26 AWG, SOLID, WHT	276-02-00049
S4-NC2	DL2-1	RES, 150Ω (R3)*	616-02-15009
S4-NC2	J3-32	#26 AWG, SOLID, WHT	276-02-00049
S6-2	J1-44		
S6-3	S5-NC1		
S3-NC1	S3-1	#26 AWG, SOLID, WHT	276-02-00049

* #26 AWG, SOLID, WHT (276-02-00049) AND HEAT SHRINK TUBING (268-98-00052) REQUIRED FOR INSTALLATION OF R2 & R3, SEE DETAIL ON DWG 17-A263.

SIZE	CODE IDENT NO.	DRAWING NO.	REV.
A	06141	17D17-0435	
SCALE		SHEET 13	

FORM 3/2/1103A

CONTROL CONTINUED

FROM	TO	WIRE	DESCRIPTION
$9-C1	$9-C2	RES, 150 Ω (R4)	616-02-15009
$9-C1	J3-N	24 AWG, SOLID, WHT	276-02-00049

SIZE	CODE IDENT NO.	DRAWING NO.	REV.
A	06141	17017-0435	
SCALE		SHEET 14	

DATE 03/02/83 FAIRCHILD WESTON INC. CODE IDENT. 06141 PAGE 1

PARTS LIST: 17-A256 MFR. NAME: FWSI PARENT STK. CONT. NO.: 17A256

DESCRIPTION: PWA,573 BIT SYNC UM: EA ECO NO.: 0600195 ENG. REV.: A*

RDU/2A NB1

ITEM NO.	COMPONENT STK. CONT. NO.	DESCRIPTION	QUANTITY	UM	MFR. NAME	MFR. PART/ASSY. NO.
001	17D170391	PWB,573 BIT SYNC	1	EA	FWSI	17D17-0391
C 001	363-39-10001	CAP, .01 UF 10% 100V	1	EA	QPL-11015	CK05BX103K
C 002	369-51-10002	CAP., .1MF 10% 100V	1	EA	QPL	CK06BX104K
C 003	369-51-10002	CAP., .1MF 10% 100V	1	EA	QPL	CK06BX104K
C 004	369-51-10002	CAP., .1MF 10% 100V	1	EA	QPL	CK06BX104K
C 005	369-15-10003	CAP, 1.0 UF 10% 50V	1	EA	QPL-11015	CK06BX105K
C 006	369-51-10002	CAP., .1MF 10% 100V	1	EA	QPL	CK06BX104K
C 007	304-62-10000	CAP. 1000PF 1% 100V	1	EA	FWSI	600
C 008	369-51-10002	CAP., .1MF 10% 100V	1	EA	QPL	CK06BX104K
C 009	304-62-10000	CAP. 1000PF 1% 100V	1	EA	FWSI	600
C 010	369-51-10002	CAP., .1MF 10% 100V	1	EA	QPL	CK06BX104K
C 011	363-15-10002	CAP, .10 UF 10% 50V	1	EA	QPL-11015	CK05BX104K
C 012	369-15-10003	CAP, 1.0 UF 10% 50V	1	EA	QPL-11015	CK06BX105K
C 013	369-15-10003	CAP, 1.0 UF 10% 50V	1	EA	QPL-11015	CK06BX105K
C 014	369-51-10002	CAP., .1MF 10% 100V	1	EA	QPL	CK06BX104K
C 015	384-05-68000	CAP., 6800PF 1% 50V	1	EA	FWSI	949
C 016	369-51-10002	CAP., .1MF 10% 100V	1	EA	QPL	CK06BX104K
C 017	369-51-10002	CAP., .1MF 10% 100V	1	EA	QPL	CK06BX104K
C 018	369-51-10002	CAP., .1MF 10% 100V	1	EA	QPL	CK06BX104K
C 019	369-51-10002	CAP., .1MF 10% 100V	1	EA	QPL	CK06BX104K
R 001	608-09-10001	RES. 10K 1% 1/10W	1	EA	FWSI	624
R 002	608-09-10000	RES. 1K 1% 1/10W	1	EA	FWSI	624
R 003	608-09-10000	RES. 1K 1% 1/10W	1	EA	FWSI	624
R 004	608-09-49901	RES, 49.9K 1% 1/10W	1	EA	FWSI	624
R 005	608-09-10502	RES, 105.0K 1% 1/10W	1	EA	FWSI	624
R 006	608-09-21002	RES, 210.0K 1% 1/10W	1	EA	FWSI	624
R 007	616-02-33002	RES,330K 5% 1/4W	1	EA	ALLEN BRAD	RC07GF334J
R 008	608-09-10001	RES. 10K 1% 1/10W	1	EA	FWSI	624
R 009	608-09-10001	RES. 10K 1% 1/10W	1	EA	FWSI	624
R 010	608-09-10001	RES. 10K 1% 1/10W	1	EA	FWSI	624
R 011	616-02-27001	RES,27K 5% 1/4W	1	EA	ALLEN BRAD	RC07GF273J
R 012	616-02-82001	RES,82K 5% 1/4W	1	EA	ALLEN BRAD	RC07GF823J
R 013	616-02-82001	RES,82K 5% 1/4W	1	EA	ALLEN BRAD	RC07GF823J
R 014	608-09-13001	RES, 13.0K 1% 1/10W	1	EA	FWSI	624
R 015	608-09-20000	RES. 2.0K 1% 1/10W	1	EA	FWSI	624
TP001	255-98-00205	TERM,PW, 2TURRET, .062BD	1	EA	CTC/MML	160-1558-02-05-00
TP002	255-98-00205	TERM,PW, 2TURRET, .062BD	1	EA	CTC/MML	160-1558-02-05-00
TP003	255-98-00205	TERM,PW, 2TURRET, .062BD	1	EA	CTC/MML	160-1558-02-05-00
TP004	255-98-00205	TERM,PW, 2TURRET, .062BD	1	EA	CTC/MML	160-1558-02-05-00
TP005	255-98-00205	TERM,PW, 2TURRET, .062BD	1	EA	CTC/MML	160-1558-02-05-00
TP006	255-98-00205	TERM,PW, 2TURRET, .062BD	1	EA	CTC/MML	160-1558-02-05-00
TP007	255-98-00205	TERM,PW, 2TURRET, .062BD	1	EA	CTC/MML	160-1558-02-05-00
TP008	255-98-00205	TERM,PW, 2TURRET, .062BD	1	EA	CTC/MML	160-1558-02-05-00
TP009	255-98-00205	TERM,PW, 2TURRET, .062BD	1	EA	CTC/MML	160-1558-02-05-00
TP010	255-98-00205	TERM,PW, 2TURRET, .062BD	1	EA	CTC/MML	160-1558-02-05-00
U 001	046-97-00772	IC,LIN AMPL,OPNL FET-IN	1	EA	TI/MML	TL074CN
U 002	046-97-00568	IC,CMOS SW,SPST	1	EA	RCA/MML	CD4016BE

CONTINUED

PARTS LIST: 17-A256 MFR. NAME: FWSI PARENT STK. CONT. NO.: 17A256

DESCRIPTION: PWA,573 BIT SYNC RDU/2A UM: EA NB1 ECO NO.: 0600195 ENG. REV.: A*

ITEM NO.	COMPONENT STK. CONT. NO.	DESCRIPTION	QUANTITY	UM	MFR. NAME	MFR. PART/ASSY. NO.
U 003	046-97-00360	IC,CMOS FF,D TYPE	1	EA	RCA/MML	CD4013BE
U 004	046-97-00351	IC,CMOS GATE,EXCL-OR 2INP	1	EA	RCA/MML	CD4070BE
U 005	046-97-00362	IC,CMOS OSMV	1	EA	RCA/MML	CD4047BE
U 006	046-97-00362	IC,CMOS OSMV	1	EA	RCA/MML	CD4047BE
U 007	046-97-00568	IC,CMOS SW,SPST	1	EA	RCA/MML	CD4016BE
U 008	046-16-00087	IC,CMOS PHASE-LOCKED LOOP	1	EA	MOT	MC14046BCP
U 009	046-97-00772	IC,LIN AMPL,OPNL FET-IN	1	EA	TI/MML	TL074CN
U 010	046-97-00360	IC,CMOS FF,D TYPE	1	EA	RCA/MML	CD4013BE
U 011	046-97-00360	IC,CMOS FF,D TYPE	1	EA	RCA/MML	CD4013BE
REF001	17SCD039	SCHEM,PWA 573 BIT SYNC	AR	EA	FWSI	17-SCD039

END OF LIST

PARTS LIST: 17-A257 MFR. NAME: FWSI PARENT STK. CONT. NO.: 17A257

DESCRIPTION: PWA,542/573 READ AMP RDU/2A UM: EA NB1 ECO NO.: RC00001 ENG. REV.: **

ITEM NO.	COMPONENT STK. CONT. NO.	DESCRIPTION	QUANTITY	UM	MFR. NAME	MFR. PART/ASSY. NO.
001	17D170400	PWB,542/573 READ AMP	1	EA	FWSI	17D17-0400
C 001	339-14-39004	CAP., 39MF 10% 35V	1	EA	EMR	601
C 002	339-14-39004	CAP., 39MF 10% 35V	1	EA	EMR	601
C 003	339-14-39004	CAP., 39MF 10% 35V	1	EA	EMR	601
C 004	369-15-10003	CAP, 1.0 UF 10% 50V	1	EA	QPL-11015	CK06BX105K
C 005	369-15-10003	CAP, 1.0 UF 10% 50V	1	EA	QPL-11015	CK06BX105K
C 006	384-05-10001	CAP., .0100MF 1% 50V	1	EA	EMR	949
C 007	384-05-10001	CAP., .0100MF 1% 50V	1	EA	EMR	949
C 008	384-05-20000	CAP., 2000PF 1% 50V	1	EA	EMR	949
C 009	384-05-10001	CAP., .0100MF 1% 50V	1	EA	EMR	949
C 010	384-05-56000	CAP., 5600PF 1% 50V	1	EA	EMR	949
C 011	384-05-10001	CAP., .0100MF 1% 50V	1	EA	EMR	949
C 012	384-05-87800	CAP., 8780PF 1% 50V	1	EA	EMR	949
C 013	384-05-10001	CAP., .0100MF 1% 50V	1	EA	EMR	949
C 014	384-05-10001	CAP., .0100MF 1% 50V	1	EA	EMR	949
C 015	384-05-20000	CAP., 2000PF 1% 50V	1	EA	EMR	949
C 016	384-05-10001	CAP., .0100MF 1% 50V	1	EA	EMR	949
C 017	384-05-56000	CAP., 5600PF 1% 50V	1	EA	EMR	949
C 018	384-05-10001	CAP., .0100MF 1% 50V	1	EA	EMR	949
C 019	384-05-87800	CAP., 8780PF 1% 50V	1	EA	EMR	949
C 020	384-05-10001	CAP., .0100MF 1% 50V	1	EA	EMR	949
C 021	301-13-10002	CAP,CR , 50V .100 UF 20%	1	EA	ERIE/MML	8131-050-651-104M
CR001	088-10-09140	DIODE,SWITCH,75V,TRR 4NS/	1	EA	CODI/MML	1N914,A,B
CR002	088-10-09140	DIODE,SWITCH,75V,TRR 4NS/	1	EA	CODI/MML	1N914,A,B
CR003	088-10-09140	DIODE,SWITCH,75V,TRR 4NS/	1	EA	CODI/MML	1N914,A,B
CR004	088-10-09140	DIODE,SWITCH,75V,TRR 4NS/	1	EA	CODI/MML	1N914,A,B
CR005	088-10-09140	DIODE,SWITCH,75V,TRR 4NS/	1	EA	CODI/MML	1N914,A,B
CR006	088-10-09140	DIODE,SWITCH,75V,TRR 4NS/	1	EA	CODI/MML	1N914,A,B
CR007	088-10-09140	DIODE,SWITCH,75V,TRR 4NS/	1	EA	CODI/MML	1N914,A,B
CR008	088-10-09140	DIODE,SWITCH,75V,TRR 4NS/	1	EA	CODI/MML	1N914,A,B
CR009	088-10-09140	DIODE,SWITCH,75V,TRR 4NS/	1	EA	CODI/MML	1N914,A,B
CR010	088-10-09140	DIODE,SWITCH,75V,TRR 4NS/	1	EA	CODI/MML	1N914,A,B
CR011	088-10-09140	DIODE,SWITCH,75V,TRR 4NS/	1	EA	CODI/MML	1N914,A,B
CR012	088-10-09140	DIODE,SWITCH,75V,TRR 4NS/	1	EA	CODI/MML	1N914,A,B
CR013	088-10-09140	DIODE,SWITCH,75V,TRR 4NS/	1	EA	CODI/MML	1N914,A,B
CR014	088-10-09140	DIODE,SWITCH,75V,TRR 4NS/	1	EA	CODI/MML	1N914,A,B
CR015	088-10-09140	DIODE,SWITCH,75V,TRR 4NS/	1	EA	CODI/MML	1N914,A,B
CR016	088-10-09140	DIODE,SWITCH,75V,TRR 4NS/	1	EA	CODI/MML	1N914,A,B
CR017	088-10-09140	DIODE,SWITCH,75V,TRR 4NS/	1	EA	CODI/MML	1N914,A,B
CR018	088-10-09140	DIODE,SWITCH,75V,TRR 4NS/	1	EA	CODI/MML	1N914,A,B
CR019	088-10-09140	DIODE,SWITCH,75V,TRR 4NS/	1	EA	CODI/MML	1N914,A,B
CR020	088-10-09140	DIODE,SWITCH,75V,TRR 4NS/	1	EA	CODI/MML	1N914,A,B
CR021	088-10-09140	DIODE,SWITCH,75V,TRR 4NS/	1	EA	CODI/MML	1N914,A,B
CR022	088-10-09140	DIODE,SWITCH,75V,TRR 4NS/	1	EA	CODI/MML	1N914,A,B
CR023	088-10-09140	DIODE,SWITCH,75V,TRR 4NS/	1	EA	CODI/MML	1N914,A,B
CR024	088-10-09140	DIODE,SWITCH,75V,TRR 4NS/	1	EA	CODI/MML	1N914,A,B
CR025	088-10-09140	DIODE,SWITCH,75V,TRR 4NS/	1	EA	CODI/MML	1N914,A,B

CONTINUED

PARTS LIST: 17-A257 MFR. NAME: FWSI PARENT STK. CONT. NO.: 17A257

DESCRIPTION: PWA,542/573 READ AMP RDU/2A UM: EA NB1 ECO NO.: RC00001 ENG. REV.: **

ITEM NO.	COMPONENT STK. CONT. NO.	DESCRIPTION	QUANTITY	UM	MFR. NAME	MFR. PART/ASSY. NO.
CR026	088-10-09140	DIODE,SWITCH,75V,TRR 4NS/	1	EA	CODI/MML	1N914,A,B
CR027	088-10-09140	DIODE,SWITCH,75V,TRR 4NS/	1	EA	CODI/MML	1N914,A,B
CR028	088-10-09140	DIODE,SWITCH,75V,TRR 4NS/	1	EA	CODI/MML	1N914,A,B
CR029	088-10-09140	DIODE,SWITCH,75V,TRR 4NS/	1	EA	CODI/MML	1N914,A,B
CR030	088-10-09140	DIODE,SWITCH,75V,TRR 4NS/	1	EA	CODI/MML	1N914,A,B
CR031	088-10-09140	DIODE,SWITCH,75V,TRR 4NS/	1	EA	CODI/MML	1N914,A,B
CR032	088-10-09140	DIODE,SWITCH,75V,TRR 4NS/	1	EA	CODI/MML	1N914,A,B
CR033	088-10-09140	DIODE,SWITCH,75V,TRR 4NS/	1	EA	CODI/MML	1N914,A,B
CR034	088-10-09140	DIODE,SWITCH,75V,TRR 4NS/	1	EA	CODI/MML	1N914,A,B
CR035	088-10-09140	DIODE,SWITCH,75V,TRR 4NS/	1	EA	CODI/MML	1N914,A,B
CR036	088-10-09140	DIODE,SWITCH,75V,TRR 4NS/	1	EA	CODI/MML	1N914,A,B
CR037	088-10-09140	DIODE,SWITCH,75V,TRR 4NS/	1	EA	CODI/MML	1N914,A,B
CR038	088-10-09140	DIODE,SWITCH,75V,TRR 4NS/	1	EA	CODI/MML	1N914,A,B
CR039	088-10-09140	DIODE,SWITCH,75V,TRR 4NS/	1	EA	CODI/MML	1N914,A,B
CR040	088-10-09140	DIODE,SWITCH,75V,TRR 4NS/	1	EA	CODI/MML	1N914,A,B
CR041	088-10-09140	DIODE,SWITCH,75V,TRR 4NS/	1	EA	CODI/MML	1N914,A,B
CR042	088-10-09140	DIODE,SWITCH,75V,TRR 4NS/	1	EA	CODI/MML	1N914,A,B
CR043	088-10-09140	DIODE,SWITCH,75V,TRR 4NS/	1	EA	CODI/MML	1N914,A,B
CR044	088-10-09140	DIODE,SWITCH,75V,TRR 4NS/	1	EA	CODI/MML	1N914,A,B
CR045	088-10-09140	DIODE,SWITCH,75V,TRR 4NS/	1	EA	CODI/MML	1N914,A,B
R 001	608-09-10001	RES. 10K 1% 1/10W	1	EA	EMR	624
R 002	608-09-10001	RES. 10K 1% 1/10W	1	EA	EMR	624
R 003	608-09-10001	RES. 10K 1% 1/10W	1	EA	EMR	624
R 004	616-02-47000	RES,4.7K 5% 1/4W	1	EA	ALLEN BRAD	RC07GF472J
R 005	608-09-10001	RES. 10K 1% 1/10W	1	EA	EMR	624
R 006	608-09-49901	RES, 49.9K 1% 1/10W	1	EA	EMR	624
R 007	608-09-20001	RES. 20K 1% 1/10W	1	EA	EMR	624
R 008	608-09-20001	RES. 20K 1% 1/10W	1	EA	EMR	624
R 009	608-09-10001	RES. 10K 1% 1/10W	1	EA	EMR	624
R 010	608-09-49901	RES, 49.9K 1% 1/10W	1	EA	EMR	624
R 011	608-09-10003	RES, 1MEG 1% 1/10W	1	EA	EMR	624
R 012	608-09-20001	RES. 20K 1% 1/10W	1	EA	EMR	624
R 013	608-09-20001	RES. 20K 1% 1/10W	1	EA	EMR	624
R 014	616-02-47000	RES,4.7K 5% 1/4W	1	EA	ALLEN BRAD	RC07GF472J
R 015	608-09-10009	RES, 100.0 OHM 1% 1/10W	1	EA	EMR	624
R 016	608-09-13001	RES, 13.0K 1% 1/10W	1	EA	EMR	624
R 017	608-09-20000	RES. 2.0K 1% 1/10W	1	EA	EMR	624
R 018	608-09-30101	RES, 30.1K 1% 1/10W	1	EA	EMR	624
R 019	608-09-10001	RES. 10K 1% 1/10W	1	EA	EMR	624
R 020	201-98-00301	POT,TRMR, 50 K 10% .75W	1	EA	BECK/MML	89PR50K
R 021	608-09-31601	RES, 31.6K 1% 1/10W	1	EA	EMR	624
R 022	608-09-15001	RES, 15.0K 1% 1/10W	1	EA	EMR	624
R 023	201-98-00294	POT,TRMR,500 OHM 10% .75W	1	EA	BECK/MML	89PR500
R 024	608-09-20000	RES. 2.0K 1% 1/10W	1	EA	EMR	624
R 025	608-09-10000	RES. 1K 1% 1/10W	1	EA	EMR	624
R 026	608-09-18701	RES, 18.7K 1% 1/10W	1	EA	EMR	624
R 027	608-09-18701	RES, 18.7K 1% 1/10W	1	EA	EMR	624

CONTINUED

PARTS LIST: 17-A257 MFR. NAME: FWSI PARENT STK. CONT. NO.: 17A257

DESCRIPTION: PWA,542/573 READ AMP RDU/2A UM: EA NB1 ECO NO.: RC00001 ENG. REV.: *#

ITEM NO.	COMPONENT STK. CONT. NO.	DESCRIPTION	QUANTITY	UM	MFR. NAME	MFR. PART/ASSY. NO.
R 028	608-09-12101	RES, 12.1K 1% 1/10W	1	EA	EMR	624
R 029	608-09-12101	RES, 12.1K 1% 1/10W	1	EA	EMR	624
R 030	608-09-10501	RES, 10.5K 1% 1/10W	1	EA	EMR	624
R 031	608-09-10501	RES, 10.5K 1% 1/10W	1	EA	EMR	624
R 032	608-09-10001	RES. 10K 1% 1/10W	1	EA	EMR	624
R 033	608-09-37401	RES, 37.4K 1% 1/10W	1	EA	EMR	624
R 034	608-09-37401	RES, 37.4K 1% 1/10W	1	EA	EMR	624
R 035	608-09-24301	RES, 24.3K 1% 1/10W	1	EA	EMR	624
R 036	608-09-24301	RES, 24.3K 1% 1/10W	1	EA	EMR	624
R 037	608-09-21001	RES, 21.0K 1% 1/10W	1	EA	EMR	624
R 038	608-09-21001	RES, 21.0K 1% 1/10W	1	EA	EMR	624
R 039	608-09-20001	RES. 20K 1% 1/10W	1	EA	EMR	624
R 040	608-09-04999	RES, 49.9 OHM 1% 1/10W	1	EA	EMR	624
R 041	608-09-04999	RES, 49.9 OHM 1% 1/10W	1	EA	EMR	624
R 042	608-09-04999	RES, 49.9 OHM 1% 1/10W	1	EA	EMR	624
R 043	608-09-04999	RES, 49.9 OHM 1% 1/10W	1	EA	EMR	624
R 044	616-02-33009	RES,330 OHM 5% 1/4W	1	EA	ALLEN BRAD	RC07GF331J
R 045	616-02-33009	RES,330 OHM 5% 1/4W	1	EA	ALLEN BRAD	RC07GF331J
R 046	608-09-13701	RES, 13.7K 1% 1/10W	1	EA	EMR	624
R 047	608-09-15000	RES, 1.50K 1% 1/10W	1	EA	EMR	624
R 048	608-09-10000	RES. 1K 1% 1/10W	1	EA	EMR	624
R 049	608-09-10000	RES. 1K 1% 1/10W	1	EA	EMR	624
R 050	616-02-33009	RES,330 OHM 5% 1/4W	1	EA	ALLEN BRAD	RC07GF331J
R 051	616-02-33009	RES,330 OHM 5% 1/4W	1	EA	ALLEN BRAD	RC07GF331J
R 052	608-09-04999	RES, 49.9 OHM 1% 1/10W	1	EA	EMR	624
TP001	255-98-00205	TERM,PW, 2TURRET, .062BD	1	EA	CTC/MML	160-1558-02-05-00
TP002	255-98-00205	TERM,PW, 2TURRET, .062BD	1	EA	CTC/MML	160-1558-02-05-00
TP003	255-98-00205	TERM,PW, 2TURRET, .062BD	1	EA	CTC/MML	160-1558-02-05-00
TP004	255-98-00205	TERM,PW, 2TURRET, .062BD	1	EA	CTC/MML	160-1558-02-05-00
TP005	255-98-00205	TERM,PW, 2TURRET, .062BD	1	EA	CTC/MML	160-1558-02-05-00
TP006	255-98-00205	TERM,PW, 2TURRET, .062BD	1	EA	CTC/MML	160-1558-02-05-00
TP007	255-98-00205	TERM,PW, 2TURRET, .062BD	1	EA	CTC/MML	160-1558-02-05-00
TP008	255-98-00205	TERM,PW, 2TURRET, .062BD	1	EA	CTC/MML	160-1558-02-05-00
U 001	046-97-00047	IC,TTL INV	1	EA	TI/MML	SN7404N
U 002	046-97-00082	IC,TTL BFR/DRVR INV,30V	1	EA	TI/MML	SN7406N
U 003	046-97-00772	IC,LIN AMPL,OPNL FET-1N	1	EA	TI/MML	TL074CN
U 004	046-97-00772	IC,LIN AMPL,OPNL FET-1N	1	EA	TI/MML	TL074CN
U 005	046-97-00568	IC,CMOS SW,SPST	1	EA	RCA/MML	CD4016BE
U 006	046-97-00772	IC,LIN AMPL,OPNL FET-1N	1	EA	TI/MML	TL074CN
U 007	046-97-00257	IC,CMOS MUX,ANLG 8-CHAN	1	EA	RCA/MML	CD4051BE
U 008	046-97-00772	IC,LIN AMPL,OPNL FET-1N	1	EA	TI/MML	TL074CN
U 009	046-97-00507	IC,CMOS BFR,INV	1	EA	RCA/MML	CD4049UBE
U 010	046-97-00313	IC,LS MUX, 4-INP	1	EA	TI/MML	SN74LS153N
U 011	046-97-00257	IC,CMOS MUX,ANLG 8-CHAN	1	EA	RCA/MML	CD4051BE
U 012	046-97-00772	IC,LIN AMPL,OPNL FET-1N	1	EA	TI/MML	TL074CN
REF001	17SCD040	SCHEM,PWA,542/573 READ	AR	EA	FWSI	17-SCD040
REF002	905-04-00001	SPEC,COMPONENT SPACING	AR	EA	FWSI	9500

END OF LIST

DATE 08/02/83 AMG088 FAIRCHILD WESTON INC. CODE IDENT. 06141 PAGE 1

PARTS LIST: 17-A258-01 MFR. NAME: FWSI PARENT STK. CONT. NO.: 17A25801

DESCRIPTION: PWA,CONTROL INTERFACE,MOD FOR PDDU PDDU UM: EA ECO NO.: 0000000 ENG. REV.: ** DLP

ITEM NO.	COMPONENT STK. CONT. NO.	DESCRIPTION	QUANTITY	UM	MFR. NAME	MFR. PART/ASSY. NO.
001	17D170405	PWB,CONTROL INTERFACE	1	EA	FWSI	17D17-0405
C 001	339-14-39004	CAP.; 39MF 10% 35V	1	EA	FWSI	601
C 002	339-14-39004	CAP.; 39MF 10% 35V	1	EA	FWSI	601
C 003	363-15-10002	CAP, .10 UF 10% 50V	1	EA	QPL-11015	CK05BX104K
C 004	301-13-10002	CAP,CR , 50V .100 UF 20%	1	EA	ERIE/MML	8131-050-651-104M
C 005	363-15-10002	CAP, .10 UF 10% 50V	1	EA	QPL-11015	CK05BX104K
C 006	301-13-10002	CAP,CR , 50V .100 UF 20%	1	EA	ERIE/MML	8131-050-651-104M
C 007	301-13-10002	CAP,CR , 50V .100 UF 20%	1	EA	ERIE/MML	8131-050-651-104M
C 008	301-13-10002	CAP,CR , 50V .100 UF 20%	1	EA	ERIE/MML	8131-050-651-104M
C 009	301-13-10002	CAP,CR , 50V .100 UF 20%	1	EA	ERIE/MML	8131-050-651-104M
C 010	301-13-10002	CAP,CR , 50V .100 UF 20%	1	EA	ERIE/MML	8131-050-651-104M
C 011	301-13-10002	CAP,CR , 50V .100 UF 20%	1	EA	ERIE/MML	8131-050-651-104M
CR001	9300272	SILICON DIODE	1	EA	FWSI	9300-272
CR002	9300272	SILICON DIODE	1	EA	FWSI	9300-272
CR003	9300272	SILICON DIODE	1	EA	FWSI	9300-272
CR004	9300272	SILICON DIODE	1	EA	FWSI	9300-272
CR005	9300272	SILICON DIODE	1	EA	FWSI	9300-272
CR006	9300272	SILICON DIODE	1	EA	FWSI	9300-272
CR007	9300272	SILICON DIODE	1	EA	FWSI	9300-272
CR008	9300272	SILICON DIODE	1	EA	FWSI	9300-272
CR009	9300272	SILICON DIODE	1	EA	FWSI	9300-272
CR010	9300272	SILICON DIODE	1	EA	FWSI	9300-272
CR011	9300272	SILICON DIODE	1	EA	FWSI	9300-272
CR012	9300272	SILICON DIODE	1	EA	FWSI	9300-272
K 001	17T0346	RELAY,PWR,12VDC FORM 2C	1	EA	AROMAT	NF2-12VDC
K 002	17T0346	RELAY,PWR,12VDC FORM 2C	1	EA	AROMAT	NF2-12VDC
Q 001	263-10-22221	XSTR,NPN 75V,DC/UHF AMPL	1	EA	FCH/MML	2N2222A
R 001	616-02-56000	RES,5.6K 5% 1/4W	1	EA	ALLEN BRAD	RC07GF562J
R 002	616-02-56000	RES,5.6K 5% 1/4W	1	EA	ALLEN BRAD	RC07GF562J
R 003	616-02-56000	RES,5.6K 5% 1/4W	1	EA	ALLEN BRAD	RC07GF562J
R 004	616-02-56000	RES,5.6K 5% 1/4W	1	EA	ALLEN BRAD	RC07GF562J
R 005	616-02-56000	RES,5.6K 5% 1/4W	1	EA	ALLEN BRAD	RC07GF562J
R 006	616-02-15009	RES,150 OHM 5% 1/4W	1	EA	ALLEN BRAD	RC07GF151J
R 007	616-02-56000	RES,5.6K 5% 1/4W	1	EA	ALLEN BRAD	RC07GF562J
R 008	616-02-15009	RES,150 OHM 5% 1/4W	1	EA	ALLEN BRAD	RC07GF151J
R 009	616-02-15009	RES,150 OHM 5% 1/4W	1	EA	ALLEN BRAD	RC07GF151J
R 010	616-02-10000	RES,1K 5% 1/4W	1	EA	ALLEN BRAD	RC07GF102J
R 011	276-02-00049	WIRE,#26,SOL, WHT, 600V	AR	FT	PRCMT OPTION	MIL-W-16878/4*SIL CTD*
R 012	276-02-00049	WIRE,#26,SOL, WHT, 600V	AR	FT	PRCMT OPTION	MIL-W-16878/4*SIL CTD*
R 013	616-02-56000	RES,5.6K 5% 1/4W	1	EA	ALLEN BRAD	RC07GF562J
U 001	046-11-00125	IC,LS ADDR,BIN 4BIT FULL	1	EA	TI/MML	SN74LS83AN *
U 002	17T0345	IC,TTL DECODER/DRIVER	1	EA	FCH	9374PC
U 003	17T0345	IC,TTL DECODER/DRIVER	1	EA	FCH	9374PC
REF001	17SCD041	SCHEM,PWA CONTROL INTFC	AR	EA	FWSI	17-SCD041
REF002	905-04-00001	SPEC,COMPONENT SPACING	AR	EA	FWSI	9500

END OF LIST

PRODUCT ASSURANCE CONTROL CENTER SEP 2 1983 CONTROLLED COPY SIGNED OUT TO

REQUESTOR: D E HARMAS SINGLE LEVEL BILL OF MATERIAL 17A15701

OPTIONS - EFFECTIVITY 4 DATE

PARENT ITEM NUMBER	ITEM DESCRIPTION	ITM TYP	ITM CLS	ITEM STAT	UM	ENG REV	MFG REV	DEM CTL	ISS CTL	DSGN SRCE	DWG NUMBER	DWG SIZE	DWG REV
17A15701	PWA,PWR SPLY,+5/+15/-15V, MOD FOR PDDU PDDU	1	S	2	EA	**	**	1	1	CJ	17-A157-01 17-A157-01	X	

FIND NO		COMPONENT ITEM NUMBER	ITEM DESCRIPTION	ITM CLS	Q T	BIN	QTY	UM	COMP TYP/U	L/T OFF	WORK CNTR	OPER	DEM CTL	ISS CTL	EFFECT	REV LVL	ECO NUMBER	BMS DATE
	001	17D170242	PWB,POWER SUPPLY	T	1		1	EA	1				1	1	IN 83-148	**	0000000	83-148
	002	9390219	TERMINAL	D	1		9	EA	1				1	1	IN 83-148	**	0000000	83-148
	003	9391750	MTG.KIT,TRANSISTOR	Z	1		3	EA	1				1	1	IN 83-148	**	0000000	83-148
	004	939E46X	EYELET	L	1		7	EA	1				1	1	IN 83-148	**	0000000	83-148
	005	17D230254	HEAT SINK	L	1		1	EA	1				1	1	IN 83-148	**	0000000	83-148
	006	939179102	HOOK-UP WIRE,20AWG	2	1		.84	FT	1				1	1	IN 83-148	**	0000000	83-148
	007	939179103	HOOK-UP WIRE,20AWG	2	1		.34	FT	1				1	1	IN 83-148	**	0000000	83-148
	008	939179104	HOOK-UP WIRE,20AWG	2	1		.34	FT	1				1	1	IN 83-148	**	0000000	83-148
	009	939179105	HOOK-UP WIRE,20AWG	2	1		.84	FT	1				1	1	IN 83-148	**	0000000	83-148
	010	939179108	HOOK-UP WIRE,20AWG	2	1		.34	FT	1				1	1	IN 83-148	**	0000000	83-148
	011	060-12-00006	CMPD,SEALANT SILICONE RBR	9	3		0	EA	1				1	1	IN 83-148	**	0000000	83-148
	012	297-98-00086	STDF,SELF-CLINCH,8-32X9/1	6	1		1	EA	1				1	1	IN 83-148	**	0000000	83-148
	013	229-02-00100	SCREW,8-32X3/8 PAN HD	6	1		1	EA	1				1	1	IN 83-148	**	0000000	83-148
	014	273-02-00027	WASHER,#8,INT TOOTH	6	1		1	EA	1				1	1	IN 83-148	**	0000000	83-148
C	001	9391769	CAPACITOR .01 UF,1KV	C	1		1	EA	1				1	1	IN 83-148	**	0000000	83-148
C	002	9391765	CAPACITOR 470UF,30V	C	1		1	EA	1				1	1	IN 83-148	**	0000000	83-148
C	003	9391646	CAPACITOR .33UF,50V	C	1		1	EA	1				1	1	IN 83-148	**	0000000	83-148
C	004	9391646	CAPACITOR .33UF,50V	C	1		1	EA	1				1	1	IN 83-148	**	0000000	83-148
C	005	9391767	CAPACITOR 150UF,30V	C	1		1	EA	1				1	1	IN 83-148	**	0000000	83-148
C	006	9391646	CAPACITOR .33UF,50V	C	1		1	EA	1				1	1	IN 83-148	**	0000000	83-148
C	007	9391646	CAPACITOR .33UF,50V	C	1		1	EA	1				1	1	IN 83-148	**	0000000	83-148
C	008	9391769	CAPACITOR .01 UF,1KV	C	1		1	EA	1				1	1	IN 83-148	**	0000000	83-148
C	009	9391769	CAPACITOR .01 UF,1KV	C	1		1	EA	1				1	1	IN 83-148	**	0000000	83-148
C	010	9391765	CAPACITOR 470UF,30V	C	1		1	EA	1				1	1	IN 83-148	**	0000000	83-148
C	011	9391646	CAPACITOR .33UF,50V	C	1		1	EA	1				1	1	IN 83-148	**	0000000	83-148
C	012	9391646	CAPACITOR .33UF,50V	C	1		1	EA	1				1	1	IN 83-148	**	0000000	83-148
M	001	9391863	BRIDGE	E	1		1	EA	1				1	1	IN 83-148	**	0000000	83-148
M	002	9391863	BRIDGE	E	1		1	EA	1				1	1	IN 83-148	**	0000000	83-148
U	001	046-97-00956	IC,LIN RGLTR,POS 15V 1A	M	1		1	EA	1				1	1	IN 83-148	**	0000000	83-148
U	002	046-97-00957	IC,LIN RGLTR,NEG 15V 1A	M	1		1	EA	1				1	1	IN 83-148	**	0000000	83-148
U	003	9391771	VOLTAGE REGULATOR,+5V	R	1		1	EA	1				1	1	IN 83-148	**	0000000	83-148
REF	001	17SCD009	SCHEMATIC POWER SUPPLY	8	2		0	EA	4				1	1	IN 83-148	**	0000000	83-148

MP MASTER
MA30018